DR686

Direct Replacement Encoder For Siemens 1XP8001

Designed as a drop in replacement for the Siemens 1XP8001 encoder, the DR686 is ready for delivery. The unique threaded shaft made this encoder hard to find, but now it is a standard order. Configurations can be ordered with either 1024 or 2048 CPR, with a 12 pin connector at the end of 18" of cable. Save time and money looking for a replacement encoder; The DR686 is the perfect solution!

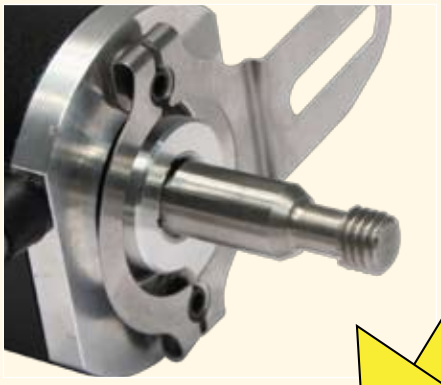

Order Number	CPR
DR686-01	1024
DR686-02	2048

Sealing to IP64!

The Accu-Coder™ DR686 Features:

- Low profile (1.19”) encoder body
- 2 piece construction; shaft screws into motor, then encoder attaches to shaft
- 1024 and 2048 CPR available
- Line Driver output
- Flex Arm mounting system makes installation easy and allows for insulation and isolation from vibration
- 12-pin connector at the end of 18" of cable
- Advanced Opto-ASIC technology for superior noise immunity
- Withstands temperatures up to 100° C

The Accu-Coder™ Advantage

- Get this encoder **FAST!**
- ***Huge savings*** in price comparison!
- The accuracy, reliability, and quality that only come from an Accu-Coder™
- Industry Best **3-year** warranty!

ACCU-CODER™ by Encoder Products Company

MADE IN U.S.A.

1-800-366-5412 • www.encoder.com • sales@encoder.com

DR686

Direct Replacement Encoder For Siemens 1XP8001

Model DR686 Specifications

Electrical

Input Voltage ..... 4.75 to 28 VDC (16 VDC Max at 100° C)

Input Current ..... 100 mA max with no output load
Output Format ..... Incremental- Two square waves in quadrature with channel A leading B for clockwise shaft rotation, as viewed from the mounting face. See *Waveform Diagram* below.
Output Types ..... Line Driver- 20 mA max per channel (Meets RS 422 at 5 VDC supply)
Freq. Response ..... 200 kHz standard
Noise Immunity ..... Tested to BS EN61000-6-2; BS EN50081-2; BS EN61000-4-2; BS EN61000-4-3; BS EN61000-4-6, BS EN55011
Symmetry ..... 180° (±18°) electrical
Quad. Phasing ..... 90° (±22.5°) electrical
Min. Edge Sep ..... 67.5° electrical
Accuracy ..... Within 0.01° mechanical from one cycle to any other cycle, or 0.6 arc minutes

Mechanical

Max Shaft Speed .... 7500 RPM

User Shaft Tolerances
Radial Runout ..... 0.007" max
Axial Endplay ..... ±0.030" max
Starting Torque ..... 0.50 oz-in
Moment of Inertia .... 3.9 X 10^{-4} oz-in-sec^2
Max Acceleration ..... 1 X 10^5 rad/sec^2
Electrical Conn ..... 18" cable (foil and braid shield, 24 AWG conductors) with 12-pin connector
Housing ..... Black non-corrosive finish
Mounting ..... Flex Arm Mount standard
Weight ..... 3.5 oz typical

Environmental

Operating Temp ..... 0° to 100°C
Storage Temp ..... -40° to +100° C
Humidity ..... 98% RH non-condensing
Vibration ..... 10 g @ 58 to 500 Hz
Shock ..... 50 g @ 11 ms duration
Sealing IP64

DR686 Dimensions

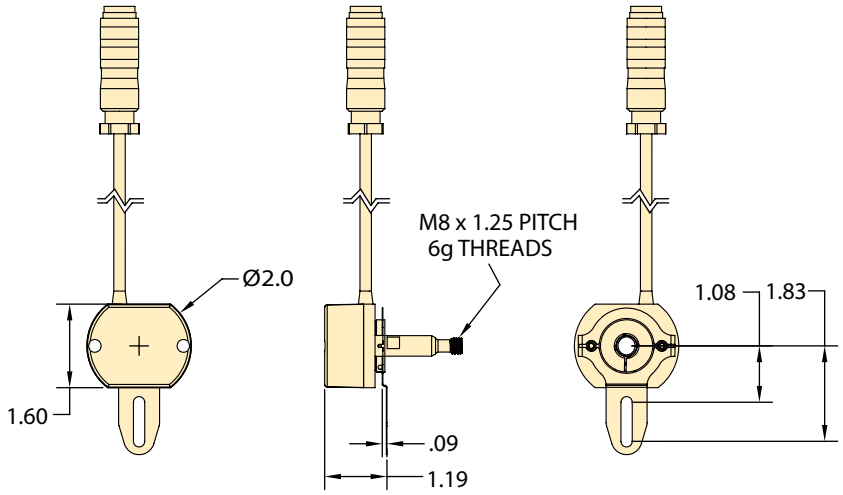

DR686

DR686 Wiring Table

DR686 WIRING	
PIN	FUNCTION
A	CHANNEL B'
B	+VDC
C	CHANNEL Z
D	CHANNEL Z'
E	CHANNEL A
F	CHANNEL A'
G	+VDC
H	CHANNEL B
J	N/C
K	COMMON
L	COMMON
M	+VDC

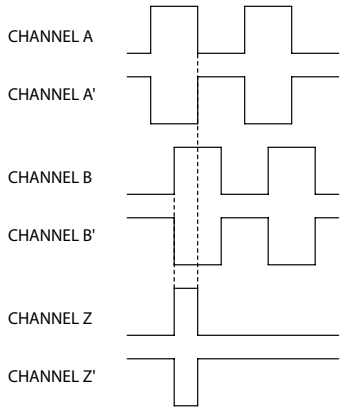

This Direct Replacement Encoder provided by;