Programmable Linear Measurement Solution

Follow these steps to create your Programmable Linear Measurement Solution.

The EPC Programmable Linear Measurement Solution allows for the selection of the encoder type (absolute or incremental), output type or protocol, measuring wheel type and size, optional mounting bracket, and optional programming kit. This wide array of component choices permit a flexible, robust measurement solution that can be fine tuned to meet the exact requirements of the customer.



Step 1: Start with your spring-loaded mounting bracket

Stock # 176742-02

This spring-loaded mounting bracket fits 2.5″ shafted encoders with servo mounts, and 58 mm shafted encoders with clamping flanges. It allows convenient application of an encoder and measuring wheel solution directly to a surface being measured. The bracket features a torsion spring, adjustable to up to 10 lbs of force, which permits the encoder and measuring wheel to be mounted in almost any orientation, even upside down. The single pivot action allows the assembly to adjust travel and wheel pressure for variations in material height.

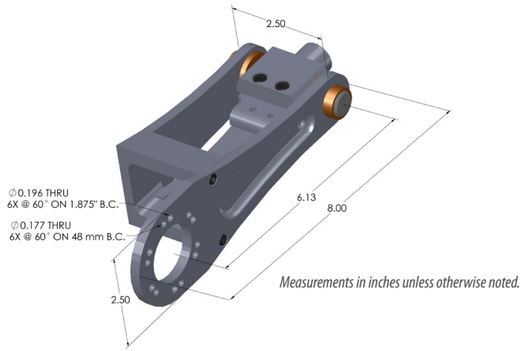

Measurements in inches unless otherwise noted.

Step 2: Choose your encoder*

**Other encoder options also available. Call EPC for more information.*

Model 25SP
Programmable Incremental Encoder

See Model 25SP Datasheet for ordering guide

When ordering, select:

- 3/8″ shaft
- 2.5″ MC Servo Mount*
- Select output type, wave-form, and CPR



**The MG flange is also an option, but it will limit the orientation of the encoder connector to 120 degree increments*

ACCU-CODERPRO™

Model A58SE
Ethernet-Ready Absolute Encoder

See Model A58SE Datasheet for ordering guide

When ordering, select:

- 3/8″ shaft
- MH Clamping Flange
- Choose either EtherCAT® or PROFINET® communication protocol



EtherCAT® PROFINET®

Model A25SB
Absolute Bus Encoder

See Model A25SB Datasheet for ordering guide

When ordering, select:

- 3/8″ shaft
- MC Servo Mount
- Choose either CANopen® or SSI communication protocol



CANopen® SSI Synchronous Serial Interface

ENCODER PRODUCTS COMPANY

Step 3: Select your measuring wheel

Choose from four different materials for your measuring wheel: urethane, knurled aluminum, knurled anodized aluminum, or rubber insert. Below are recommended sizes, but other wheels are available. Not sure which wheel you need? See technical bulletin TB-108: *Encoders with Measuring Wheels* at encoder.com/technical-bulletins or give us a call.

Urethane

Stock # 161428 – 12″ circ.
Stock # 161442 – 300 mm circ.



Knurled Aluminum

Stock # 161432 – 12″ circ.
Stock # 161443 – 300 mm circ.

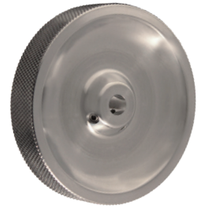

Knurled Anodized Aluminum

Stock # 161436 – 12″ circ.
Stock # 161438 – 300 mm circ.



Rubber Insert

Stock # 161386 – 12″ circ.
Stock # 161384 – 300 mm circ.

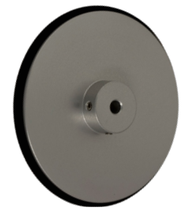

Step 4: Consider your accessories

Stock # 176389-01 – Angle Mounting Bracket

This bracket simplifies installation of your linear measurement solution. Designed specifically for EPC products, this bracket allows you to mount and install your encoder, bracket, and measuring wheel solution quickly and easily, without having to design, machine, or source a mounting solution.



Stock # PR1-001 – USB Programming Module

This module is required for field programming capability for the Model 25SP. Download the User Guide or the Quick Start Instructions at encoder.com/technical-bulletins, or watch the video at encoder.com/videos to see how simple it is to program your Model 25SP.



Step 5: Order your Programmable Linear Measurement Solution!

Call us to order your Programmable Linear Measurement Solution today. Questions? Need an authorized distributor? No problem. When you call EPC, you talk to engineers and encoder experts who can help you find the right solution for your application.

Give us a call today. **1-800-366-5412**

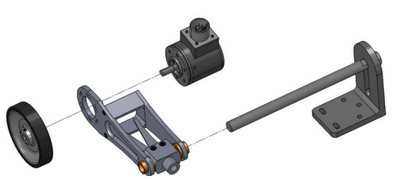

© 2020 Encoder Products Company. All Rights Reserved. REV 02/13/20