MODEL 702 - INCREMENTAL MOTOR MOUNT ENCODER

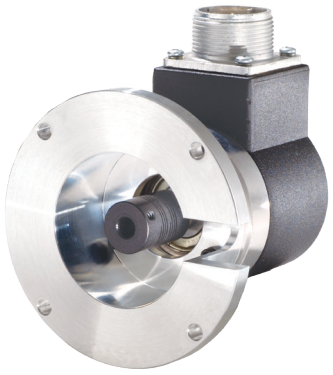

Ø3.5"

FEATURES

Up to 30,000 CPR
IP66 sealing available
Mounting flange available with boss

The compact, industry standard 2-inch diameter Model 702 Motor Mount Accu-Coder® is designed to withstand harsh factory and plant floor environments. The mounting flange, with integral shaft and coupling, allows for easy installation on a motor or shaft assembly, without the need for additional brackets or couplings. With the ability to handle shaft speeds of up to 8000 RPM and withstand the shock and vibration of high speed servo motors, the Model 702 Motor Mount Accu-Coder® is heavy duty, ultra-rugged, and reliable.

COMMON APPLICATIONS

Servo and Stepper Motor Control, Robotics, X-Y Positioning Tables, Machine Tools

MODEL 702 ORDERING GUIDE

Blue type indicates price adder options. Not all configuration combinations may be available. Contact Customer Service for details.

702	–	31	–	S	–	1000	–	R	–	HV	–	1	–	B	–	1	–	E	X	–	N	–	CE

MODEL
702 Size 20 (2.0")

COUPLING BORE
31 1/4", 0.250"
32 3/8", 0.375"
33 1/2", 0.500"

OPERATING TEMPERATURE
S 0° to 70° C
H 0° to 100° C[1]

CYCLES PER REVOLUTION
1-30,000
See CPR Options below
Price adder for >1270

NUMBER OF CHANNELS[2]
A Channel A
Channel A Leads B
Q Quadrature A & B
R Quadrature A & B with Index
Channel B Leads A
K Reverse Quadrature A & B
D Reverse Quadrature A & B with Index

OUTPUT TYPE
5 - 28V In/Out[3]
OC Open Collector
PU Pull-Up Resistor
PP Push-Pull
HV Line Driver[4]
8 - 28V In/5V Out[5, 6]
H5 Line Driver[4]
P5 Push-Pull

MAXIMUM FREQUENCY
1 Standard 100 kHz
2 200 kHz ≤ 3000 CPR
5 250 kHz > 3000 CPR
3 500 kHz > 6000 CPR[7]
4 1 MHz > 10,000 CPR[7]

MOUNTING
I Integral shaft coupling
B Integral coupling w/boss

SEALING
N No seal
1 IP66
2 IP64

CONNECTOR LOCATION
E End
S Side

CONNECTOR TYPE[8]
W 6-pin MS[4]
Y 7-pin MS[4]
X 10-pin MS
9D 9-pin D-subminiature
J 5-pin M12 (12 mm)[4]
K 8-pin M12 (12 mm) standard wiring
Z 8-pin M12 (12 mm) optional wiring
G Gland, 24" Cable[9]
H 10-pin Bayonet

MATING CONNECTOR
N No
Y Yes

CERTIFICATION
N None
CE CE Marked[10]

NOTES:

1 0° to 85° C for certain resolutions, see CPR Options.
2 Contact Customer Service for non-standard index gating options.
3 24 VDC max for high temperature option.
4 Line Driver not available with 5-pin M12 or 6-pin MS connector. Available with 7-pin MS connector only without Index Z.
5 Standard temperature, 60 to 3000 CPR only. Not available with 2400 CPR, 2540 CPR, or 2880 CPR.
6 H5 and P5 outputs are not available with CE option.
7 Standard cable lengths only. For details, please refer to Technical Bulletin TB 116: Noise & Signal Distortion Considerations at encoder.com.
8 For mating connectors, cables, and cordsets see Accessories or visit encoder.com. For Pin Configuration Diagrams, see Technical Information or visit encoder.com.
9 For non-standard cable lengths, add a forward slash (/) plus cable length expressed in feet. Example: G/6 = 6 feet of cable.
10 Please refer to Technical Bulletin TB-100: When to Choose the CE Mark at encoder.com.

Model 702 CPR Options

0001*	0002*	0004*	0005*	0006*	0007*	0008*	0010*	0011*
0012*	0014*	0020	0021*	0024*	0025*	0028*	0030*	0032*
0033*	0034*	0035*	0038*	0040*	0042*	0045*	0050*	0060
0064*	0100	0120	0125	0128*	0144*	0150*	0160*	0192*
0200	0240*	0250	0254*	0256*	0300	0333*	0360	0400
0500	0512	0600	0625*	0635	0665*	0720	0889	1000
1024	1200	1204*[a]	1250[a]	1270[a]	1440	1500	1800	2000
2048	2400[a]	2500	2540[a]	2880[a]	3000[a]	3600[a]	4000[a]	4096[a]
5000[a]	6000[a]	7200[a]	7500[a]	9000[a]	10,000[a]	10,240[a]	12,000[a]	12,500[a]
14,400[a]	15,000[a]	18,000[a]	20,000[a]	20,480[a]	25,000[a]	30,000[a]		

* Contact Customer Service for High Temperature Option (H).
[a] High Temperature Option (H) limited to 85° C maximum for these CPR options.
New CPR values are periodically added to those listed. Contact Customer Service to determine all currently available CPR values. Special disk resolutions are available upon request. A one-time NRE fee may apply.

1-800-366-5412 | encoder.com | sales@encoder.com
© 2023 Encoder Products Company, REV 10/18/2023

MODEL 702 - INCREMENTAL MOTOR MOUNT ENCODER

MODEL 702 SPECIFICATIONS

Electrical

Input Voltage	4.75 to 28 VDC max for temperatures up to 70° C 4.75 to 24 VDC for temperatures between 70° C and 100° C
Input Current	100 mA max with no output load
Input Ripple	100 mV peak-to-peak at 0 to 100 kHz
Output Format	Incremental – Two square waves in quadrature with channel A leading B for clockwise shaft rotation, as viewed from the encoder mounting face. See Waveform Diagrams.
Output Types	Open Collector – 100 mA max per channel Pull-Up – Open Collector with 2.2K ohm internal resistor, 100 mA max per channel Push-Pull – 20 mA max per channel Line Driver – 20 mA max per channel (Meets RS 422 at 5 VDC supply)
Index	Occurs once per revolution. The index for units > 3000 CPR is 90° gated to Outputs A and B. See Waveform Diagrams.
Max Frequency	Up to 1 MHz.
Electrical Protection	Reverse voltage and output short circuit protected. NOTE: Sustained reverse voltage may result in permanent damage.
Noise Immunity	Tested to BS EN61000-4-2; IEC801-3; BS EN61000-4-4; DDENV 50141; DDENV 50204; BS EN55022 (with European compliance option); BS EN61000-6-2; BS EN50081-2
Symmetry	1 to 6000 CPR: 180° (±18°) electrical at 100 kHz output 6001 to 20,480 CPR: 180° (±36°) electrical
Quad Phasing	1 to 6000 CPR: 90° (±22.5°) electrical at 100 kHz output 6001 to 20,480 CPR: 90° (±36°) electrical
Min Edge Separation	1 to 6000 CPR: 67.5° electrical at 100 kHz output 6001 to 20,480 CPR: 54° electrical > 20,480 CPR: 50° electrical
Rise Time	Less than 1 microsecond
Accuracy	Instrument and Quadrature Error: For 200 to 1999 CPR, 0.017° mechanical (1.0 arc minutes) from one cycle to any other cycle. For 2000 to 3000 CPR, 0.01° mechanical (0.6 arc minutes) from one cycle to any other cycle. Interpolation error (units > 3000 CPR only) within 0.005° mechanical. (Total Optical Encoder Error = Instrument + Quadrature + Interpolation)

Mechanical

Max Shaft Speed	8000 RPM. Higher shaft speeds may be achievable, contact Customer Service.
Starting Torque	1.0 oz-in typical with IP64 seal or no seal 3.0 oz-in typical with IP66 shaft seal
Moment of Inertia	5.2 x 10^{-4} oz-in-sec^2
Max Acceleration	1 x 10^5 rad/sec^2
Housing	Black non-corrosive finish
Bearings	Precision ABEC ball bearings
Weight	14 oz typical

Environmental

Storage Temp	-25° to 85° C
Humidity	98% RH non-condensing
Vibration	20 g @ 58 to 500 Hz
Shock	75 g @ 11 ms duration
Sealing	IP66 (NEMA 13 and 4/4X) with shaft seal; IP64 available

MODEL 702 WITH INTEGRAL COUPLING (I)

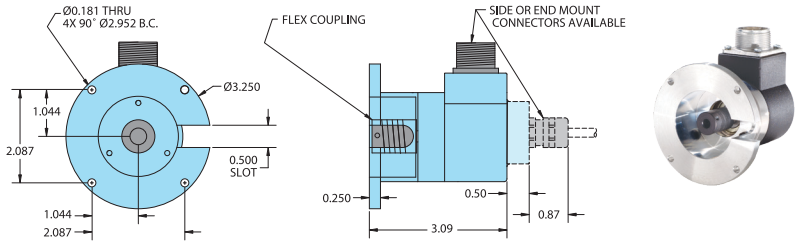

MODEL 702 WITH INTEGRAL COUPLING AND BOSS (B)

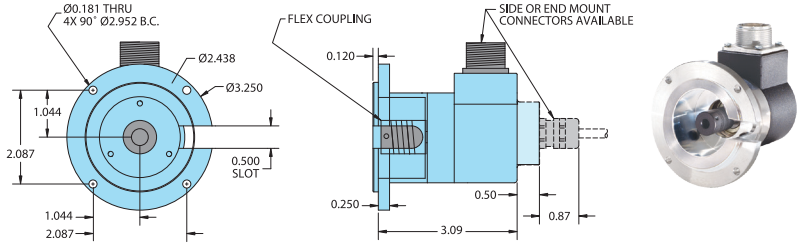

All dimensions are in inches with a tolerance of ±0.005" or ±0.01" unless otherwise specified. Metric dimensions are given in brackets [mm].

1-800-366-5412 | encoder.com | sales@encoder.com
© 2023 Encoder Products Company, REV 10/18/2023

MODEL 702 - INCREMENTAL MOTOR MOUNT ENCODER

WAVEFORM DIAGRAMS

Line Driver and Push-Pull

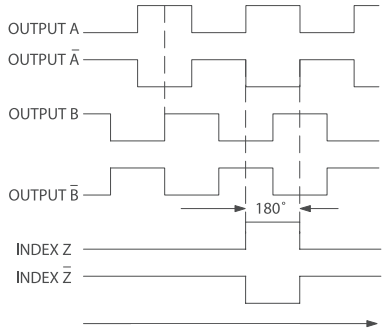

CLOCKWISE ROTATION AS VIEWED FROM THE MOUNTING FACE

NOTE: ALL DEGREE REFERENCES ARE ELECTRICAL DEGREES. Waveform shown with optional complementary signals $\overline{A}$, $\overline{B}$, $\overline{Z}$ for HV output only.

Open Collector and Pull-Up

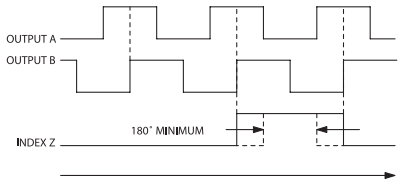

CLOCKWISE ROTATION AS VIEWED FROM THE MOUNTING FACE

NOTE: ALL DEGREE REFERENCES ARE ELECTRICAL DEGREES. Index is positive going.

WIRING TABLE

For EPC-supplied mating cables, refer to wiring table provided with cable. Trim back and insulate unused wires.

Function	Gland Cable† Wire Color	5-pin M12**	8-pin M12** Standard Wiring	8-pin M12** Optional Wiring	10-pin MS	7-pin MS HV, H5	7-pin MS PU, PP, OC, P5	6-pin MS PU, PP, OC, P5	9-pin D-sub	10-pin Bayonet
Com	Black	3	7	1	F	F	F	A, F	9	F
+VDC	Red	1	2	2	D	D	D	B	1	D
A	White	4	1	3	A	A	A	D	2	A
A'	Brown	--	3	4	H	C	--	--	3	H
B	Blue	2	4	5	B	B	B	E	4	B
B'	Violet	--	5	6	I	E	--	--	5	J
Z	Orange	5	6	7	C	--	C	C	6	C
Z'	Yellow	--	8	8	J	--	--	--	7	K
Case	Green	--	--	--	G	G	G	--	8	G
Shield	Bare*	--	--	--	--	--	--	--	--	--

* CE Option: Cable shield (bare wire) is connected to internal case.
† Standard cable is 24 AWG conductors with foil and braid shield.
** CE Option: Use cable cordset with shield connected to M12 connector coupling nut.

1-800-366-5412 | encoder.com | sales@encoder.com
© 2023 Encoder Products Company, REV 10/18/2023