865T - STAINLESS STEEL ENCODER



Ø6.5"

FEATURES

C-Face thru-bore encoder with stainless steel housing
Fits NEMA Size 56C thru 184C motor faces (4.5" AK)
Slim profle – only 1.00" deep
Incorporates Opto-ASIC technology
Resolutions to 4096 CPR

The Model 865T C-Face encoder is a rugged, high resolution encoder designed to mount directly on NEMA C-Face motors. Both sides of the encoder are C-Face mounts, allowing additional C-Face devices to be mounted to this encoder. Unlike many C-Face kit type encoders, the Model 865T contains precision bearings and an internal flex mount, virtually eliminating encoder failures and inaccuracies induced by motor shaft runout or axial endplay. The advanced Opto-ASIC design provides advanced noise immunity necessary for many industrial applications. This encoder is ideal for applications using induction motors and flux vector control. The 1.00" thick model 865T provides speed and position information for drive feedback in a slim profile. The thru-bore design allows fast and simple mounting of the encoder directly to the accessory shaft or to the drive shaft of the motor, using the standard motor face (NEMA sizes 56C - 184C). The tough Type 316 Stainless Steel housing resists the corrosion and hazards of a caustic industrial environment.

COMMON APPLICATIONS

Motor Feedback, Velocity & Position Control, Conveyors, Variable Speed Drives, Mixing & Blending Motors, Assembly & Specialty Machine

865T ORDERING GUIDE

Blue type indicates price adder options. Not all configuration combinations may be available. Contact Customer Service for details.

Mechanical | Electrical | Optional Features

865T	–	34	H1	–	0500	N	V1	R	OC	–	F02	–		Leave blank for standard options	

MODEL
865T 4.5" NEMA AK dimension, stainless steel thru-bore

HOUSING STYLE
H1 Thru-bore housing version with IP50 dust seal[1].
H2 Cover completely encloses motor shaft, and eliminates access to motor shaft. IP66 rated.

INPUT VOLTAGE
V1 5 to 28 VDC[2]

OUTPUT TYPE
OC Open Collector
PU Pull-Up Resistor
PP Push-Pull
HV Line Driver[4]

OPERATING TEMPERATURE
0° to 70° C (Std)
T4 0° to 100° C

CERTIFICATION
None (Std)
CE CE Marked[7]

BORE SIZE
11 5/8". 0.625"
34 3/4", 0.750"
18 7/8", 0.875"
80 1", 1.000"
13 14 mm
19 19 mm
24 24 mm

CYCLES PER REVOLUTION
See *CPR Options* below for available resolutions
Price adder for CPR > 1024

NUMBER OF CHANNELS[3]
Channel A leads B
Q Quadrature A & B
R Quadrature A & B with Index
Channel B leads A
K Reverse quadrature A & B
D Reverse quadrature A & B with Index
See Quadrature Phasing & Index Gating Options at encoder.com for additional options and waveforms

CONNECTOR TYPE[5]
F02 Gland nut with 24" cable[6]
SMJ 5-pin M12[4]
SMK 8-pin M12

865T CPR OPTIONS

0060	0100	0120	0240
0250	0256	0500	0512
1000	1024	2048	2500
4096			

Contact Customer Service for other disk resolutions; not all disk resolutions available with all output types

NOTES:
1 Housing style H1 Thru-Bore version equipped with IP50 dust seal. Unit must be mounted between two C-Face devices with supplied gasket to be IP66 sealed.
2 5 to 24 VDC max for high temperature option.
3 Contact Customer Service for index gating options.
4 Line Driver Output not available with 5-pin M12 connector.
5 For mating connectors, cables, and cordsets see Accessories at encoder.com. For Connector Pin Configuration Diagrams, see Technical Information or see Connector Pin Configuration Diagrams at encoder.com.
6 For non-standard cable lengths enter 'F' plus cable length expressed in feet. Example: F06 = 6 feet of cable.
7 Please refer to Technical Bulletin TB100: When to Choose the CE Mark at encoder.com.

© 2026 Encoder Products Company_v1.2_REV 07/01/2026

865T - STAINLESS STEEL ENCODER

865T SPECIFICATIONS

Electrical

Input Voltage	4.75 to 28 VDC max for temperatures up to 70° C 4.75 to 24 VDC for temperatures between 70° C and 100° C
Input Current	100 mA max with no output load
Input Ripple	100 mV peak-to-peak at 0 to100 kHz
Output Format	Incremental – Two square waves in quadrature with channel A leading B for clockwise shaft rotation, as viewed from the mounting face. See Waveform Diagrams.
Output Types	**Open Collector (OC)** - 100 mA max per channel **Pull-Up (PU)** - Open Collector with 2.2K ohm internal resistor, 100 mA max per channel **Push-Pull (PP)** - 20 mA max per channel **Line Driver (HV)** - 20 mA max per channel (Meets RS 422 at 5 VDC supply)
Index	Once per revolution. 0001 to 0512 CPR: Ungated; 0513 to 4096 CPR: Gated to output A See Waveform Diagrams.
Max. Frequency	200 kHz
Noise Immunity	Tested to BS EN61000-4-2; IEC801-3; BS EN61000-4-4; DDENV 50141; DDENV 50204; BS EN55022 (with European compliance option); BS EN61000-6-2; BS EN50081-2
Quadrature	67.5° electrical or better is typical
Edge Separation	54° electrical minimum at temperatures > 99° C
Rise Time	Less than 1 microsecond

Mechanical

Max Shaft Speed	6000 RPM. Higher shaft speeds may be achievable, contact Customer Service.
Bore Tolerance	+0.0015"/-0.000"
User Shaft Tolerances	Radial Runout 0.005" Axial Endplay ±0.050"
Housing	Type 316 Stainless Steel
Weight	6 lb typical

Environmental

Storage Temp	-25° to 100° C
Humidity	98% RH non-condensing
Vibration	10 g @ 58 to 500 Hz
Shock	50 g @ 11 ms duration
Sealing	IP66 when mounted between two C-Face devices with supplied gasket kit, or with H1 cover. IP50 if not installed in either manner.

WIRING TABLE

For EPC-supplied mating cables, refer to wiring table provided with cable.

Trim back all unused wires.

Function	Gland Cable* Wire Color	5-pin M12** PU, PP, OC	8-pin M12**
Com	Black	3	7
+VDC	Red	1	2
A	White	4	1
A'	Brown	--	3
B	Blue	2	4
B'	Violet	--	5
Z	Orange	5	6
Z'	Yellow	--	8
Shield	Bare	--	--

*Standard cable is 24 AWG conductors with foil and braid shield.

**CE Option: Use cable cordset with shield connected to M12 connector coupling nut.

WAVEFORM DIAGRAMS

Line Driver and Push-Pull

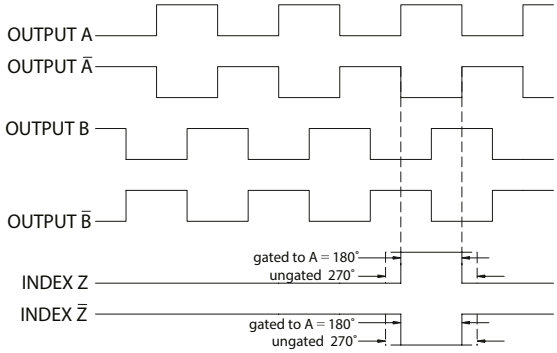

Clockwise rotation as viewed from the mounting face.

NOTE: All degree references are electrical degrees.
Waveform shown with optional complementary signals.
Ā, B̄, Z̄ for HV output only.

Open Collector and Pull-Up

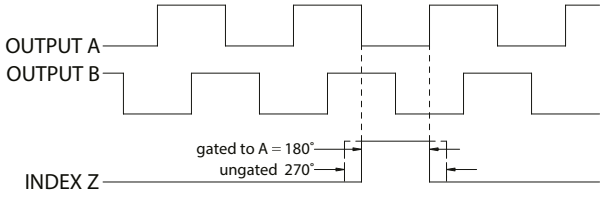

Clockwise rotation as viewed from the mounting face.

NOTE: All degree references are electrical degrees. Index is positive going.

© 2026 Encoder Products Company_v1.2_REV 07/01/2026

865T - STAINLESS STEEL ENCODER

865T CONNECTOR OPTIONS

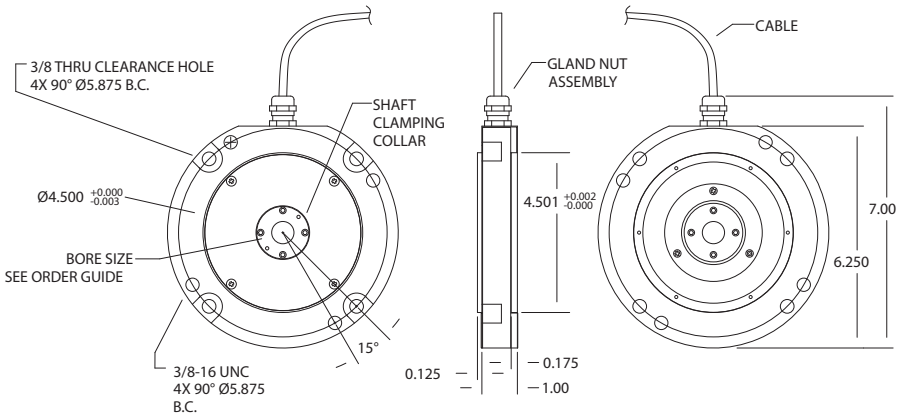



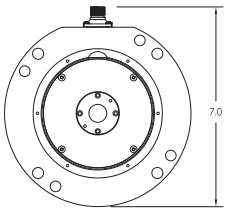

Model 865T shown with M12 connector option. Specify 5-pin or 8-pin using Ordering Guide.

865T OPTIONAL HOUSING COVER (H2)

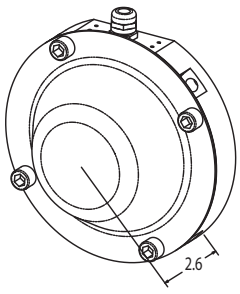



All dimensions are in inches with a tolerance of ±0.005" or ±0.01" unless otherwise specified.

© 2026 Encoder Products Company_v1.2_REV 07/01/2026