MODEL 960 - SINGLE TURN ABSOLUTE ENCODER



Ø2.0"

FEATURES

- Low-Profile – 1.55"
- Thru-Bore or Hollow Bore Styles
- Industrial Grade, Heavy Duty Housing
- State-of-the-Art Opto-ASIC Circuitry

The single turn Model 960 Absolute Series Encoder provides a unique solution to a wide variety of industrial applications requiring absolute position information. By providing a low profile package of just 1.55", as well as a variety of hollow and thru-bore sizes and an easy to use flexible mounting system, the Model 960 goes where traditional absolute encoders do not fit. In addition, its innovative Opto-ASIC circuitry, coupled with its digital output, make it an excellent choice in those applications plagued by an unusually high level of electrical noise. The Model 960 can easily be mounted directly on a motor shaft, bringing the advantage of absolute positioning in an all metal housing, while eliminating the fixtures, couplers and adapters required by other absolute encoder designs.

COMMON APPLICATIONS

Machine Tools, Robotics, Telescopes, Antennas, Rotary & X-Y Positioning Tables, Medical Scanners

Not recommended for new applications.

MODEL 960 ORDERING GUIDE

Blue type indicates price adder options. Not all configuration combinations may be available. Contact Customer Service for details.

960 – T – 01 – G – 09 – PP – SF – G/6 – CE

MODEL
960 Absolute Series Thru-Bore

HOUSING STYLE
T Thru-Bore
B Hollow Bore

BORE SIZE
01 1/4", 0.250"
02 3/8", 0.375"
04 6 mm
14 8 mm
05 10 mm

OUTPUT CODE
G Gray Code

RESOLUTION
(Bits, Counts Per Revolution)
08 8 bit, 0256
09 9 bit, 0512
10 10 bit, 1024
11 11 bit, 2048
36 9 bit, 360 (XS76)
72 10 bit, 720 (XS152)

OUTPUT TYPE
PP Push Pull (Standard)
OC Open Collector

MOUNTING
SF Standard Slotted Flex Mount
FA Flexible Arm

CONNECTOR TYPE
G Gland, 18" Cable[1]

CERTIFICATION
N None
CE CE Marked[2]

NOTES:
1 For non-standard cable lengths, add a forward slash (/) plus cable length expressed in feet. Example: G/6 = 6 feet of cable.
2 Please refer to Technical Bulletin ***TB100: When to Choose the CE Mark*** at encoder.com.

1-800-366-5412 | encoder.com | sales@encoder.com
© 2026 Encoder Products Company, REV 1.1 - 02/24/2026

MODEL 960 - SINGLE TURN ABSOLUTE ENCODER

MODEL 960 SPECIFICATIONS

Electrical

Input Voltage.....4.75 to 26 VDC max
Regulation.....100 mV peak-to-peak, max ripple at 0 to 10 kHz
Input Current.....100 mA max with no external load
Output Format.....Absolute – Parallel Outputs
Output Type.....Open Collector – 20 mA max per channel
Push-Pull – 20 mA max per channel
Code.....Gray Code, Excess Gray Code
Max Frequency.....25.6 kHz (LSB)
Rise Time.....Less than 1 microsecond
Resolution.....Up to 11 bit
Accuracy.....±1/2 LSB

Control

Directional Control..Field selectable for increasing counts (CW or CCW) Standard configuration user selects the applicable MSB wire for direction of count. Direction control option allows user to select count direction by applying 0 VDC to an encoder input. *See Wiring Table.*

Mechanical

Max Shaft Speed.....6000 RPM continuous
Bore Size.....0.250", 0.3125", 0.375", 6 mm, 8 mm, 10 mm
Bore Tolerance.....-0.0000" / +0.0006"
User Shaft Tolerances
Radial Runout.....0.007"
Axial Endplay.....±0.030"
Starting Torque.....0.3 oz-in typical for thru-bore
0.14 oz-in typical for hollow bore
Electrical Conn.....Gland with 18" cable (braid shield, 30 AWG conductors)
Housing.....Aluminum with non-corrosive finish
Mounting.....Slotted Flex Mount standard, Flex Arm optional
Weight.....7 oz typical

Environmental

Operating Temp.....0° to 70° C
Storage Temp.....-20° to 85° C
Humidity.....98% RH non-condensing
Vibration.....10 g @ 58 to 500 Hz
Shock.....20 g @ 11 ms duration
Sealing.....IP50

MODEL 960 SLOTTED FLEX MOUNT (SF)

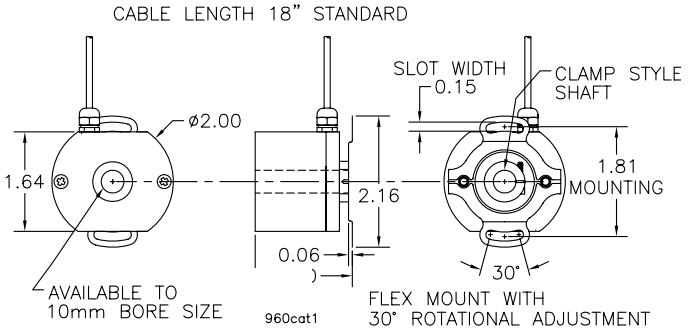



MODEL 960 WITH FLEX ARM (FA)

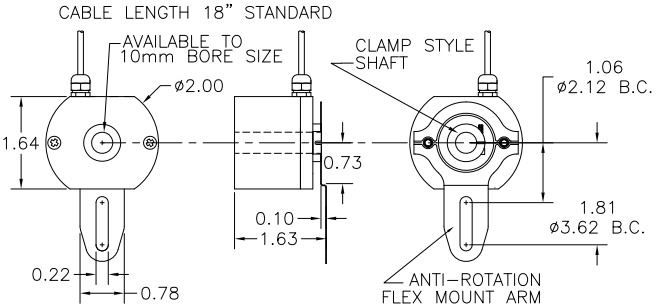



All dimensions are in inches with a tolerance of ±0.005" or ±0.01" unless otherwise specified.

WIRING TABLE

For EPC-supplied mating cables, refer to wiring table provided with cable.
Trim back and insulate unused wires.

Function	Gland Cable† Wire Color
Common	Black
+VDC	Red
S1 CW MSB	Brown
S1 CCW MSB	Yellow
S2	White
S3	Green
S4	Orange
S5	Blue
S6	Violet
S7	Gray
S8 LBS 8-bit	Pink
S9 LSB 9-bit	Green /Red
S10 LSB 10-bit	Yellow /Red
S11 LSB 11-bit	Turquoise
Direction Control**	Red /Blue
Case Ground*	Shield

*CE Option only.
**Standard is CW increasing count (when viewed from shaft end, and using brown wire for MSB).
Red/Blue is pulled up internally to 5 VDC.
To reverse count direction, Red/Blue must be pulled to low (0 VDC). If 5 VDC is applied to Red/Blue, unit remains in standard CW increasing count mode. Count direction can also be reversed by using the yellow MSB wire instead of the Brown. At no time should voltage applied to Red/Blue exceed 5 VDC.
†Standard cable is 24 AWG conductors with foil and braid shield.

1-800-366-5412 | encoder.com | sales@encoder.com
© 2026 Encoder Products Company, REV 1.1 - 02/24/2026