MODEL A25SB - ABSOLUTE SHAFT ENCODER



Ø2.5"

SSI Synchronous Serial Interface

IO-Link

CANopen SAE J1939

FEATURES

Single Turn/Multi-Turn Absolute Encoder (16 Bit ST / 43 Bit MT)
SSI, CANopen®, SAE J1939, and IO-Link communication protocols
Maintenance-free and environmentally friendly magnetic design
Energy harvesting magnetic multi-turn technology
No gears or batteries
IP67 sealing available
Servo and flange mounting
Standard Size 25 package (2.5" x 2.5")
Meets CE/EMC standards for immunity and emissions

The Model A25SB absolute encoder offers a high performance solution for your absolute feedback needs. This encoder is especially suited for applications where position information must be retained after loss of system power. It provides maintenance-free feedback thanks to its innovative battery-free and gear-free multi-turn technology. This encoder is the perfect choice for harsh industrial applications thanks to its rugged magnetic technology, available IP67 rating, and proven double bearing design. Available with several shaft sizes and mounting styles, the Model A25SB is easily designed into OEM and aftermarket applications.

COMMON APPLICATIONS

Robotics, Telescopes, Antennas, Medical Scanners, Wind Turbines, Elevators, Lifts, Motors, Automatic Guided Vehicles, Heavy Duty Vehicles, Cranes, Rotary and X/Y Positioning Tables

MODEL A25SB ORDERING GUIDE

Blue type indicates price adder options

Model	Mechanical		Electrical							Environmental		
A25SB	10	MA	12	10	CO	A	B	V2	RMJ		NR	

MODEL
A25SB Absolute Series

SHAFT SIZE
10 10 mm
A9 3/8", 0.375"
A5 1/4", 0.250"

MOUNTING TYPE
MA 2.50" Flange
MC 2.50" Servo mount

SINGLE TURN RESOLUTION[10]
01 to 16 Bit

MULTI-TURN RESOLUTION[10]
00 Single Turn
01 to 43 Multi-Turn

COMMUNICATION PROTOCOL
CO CANopen[2]
CJ SAE J1939[1,3]
IO IO Link[5,10]
SI SSI[4]

SOFTWARE REV
A Revision A

OUTPUT CODE
B Binary
G Gray[6]

INPUT VOLTAGE
5 5 VDC[6]
V2 5 to 32 VDC
V6 18 to 30 VDC[8]

CONNECTOR TYPE
RMJ 5-pin M12 Side Mount[7]
RMK 8-pin M12 Side Mount[6]

TEMP
0° to 80° C (Std)
T5 -40° to 80° C

TERMINATING RESISTOR[9]
NR None (Std)
RS Internal resistor (fixed 120 Ohm)

SEAL
IP50 (Std)
S3 IP66
S4 IP67

Notes:

1 SAE J1939 can transmit a maximum of 32 bits in process data. The sum of single turn and multiturn results in a maximum of 32 bits. This can be, for example, 16-bit ST and 16-bit MT
2 Please refer to CANopen Interface Technical Reference Manual at encoder.com.
3 Please refer to Technical Bulletin TB-546: SAE J1939 Interface and Process Data at encoder.com.
4 Please refer to Technical Bulletin TB-529: Understanding EPC's SSI Encoders at encoder.com.
5 Please refer to IO-Link Technical Reference Manual at encoder.com.
6 Available with SSI only.
7 Available with CANopen, IO-Link, and SAE J1939 only.
8 IO-Link only available with V6 input voltage (18-30VDC). V6 only available with IO-Link.
9 Terminating resistor available with CANopen and J1939 only
10 IO-Link encoders are only available in a Multi-turn configuration but they may be configured for single turn usage.

EPC RESERVES THE RIGHT TO UPDATE, REVISE AND AMEND ALL SOFTWARE AND TECHNICAL DATA OR CONTENT AT ANY TIME. EPC SHALL HAVE NO LIABILITY OF ANY KIND OR NATURE FOR ANY TECHNICAL ERRORS OR OMISSIONS IN ANY SOFTWARE OR TECHNICAL DATA.
See encoder.com for more information.

1-800-366-5412 | encoder.com | sales@encoder.com
© 2026 Encoder Products Company_v1.6_REV 06/09/2026

MODEL A25SB - ABSOLUTE SHAFT ENCODER

Electrical

Input Voltage	5 to 32 VDC max CANopen and J1939 5 VDC SSI Only 18 to 30 VDC IO-Link Only
Input Current	50 mA typical for 5 to 32 VDC 80 mA typical for 5 VDC 30 mA typical for 18 to 30 VDC
Power Consumption	0.5 W max 0.6 W max IO-Link
Resolution (Single)	01 to 16 bit
Resolution (Multi)	01 to 43 bit
Accuracy	<±0.0878°
Repeatability	<±0.0878°
CE/EMC	Immunity tested per EN 61000-6-2:2006 Emissions tested per EN 61000-6-3:2011

Mechanical

Max Shaft Speed	8000 RPM
Shaft Material	303 Stainless Steel
Radial Shaft Load	Bearing life of $1.5x10^9$ revolutions: 80lbs (355 N) max. rated load of 20 to 40lbs (88 to 177 N)
Axial Shaft Load	Bearing life of $1.5x10^9$ revolutions: 80lbs (355 N) max. rated load of 20 to 40lbs (88 to 177 N)
Starting Torque	1.0 oz-in typical with no seal 3.0 oz-in typical with IP66 shaft seal 7.0 oz-in typical with IP67 shaft seal
Housing	Black non-corrosive finish
Weight	20 oz typical

Environmental

Storage Temp	-40° C to 100° C
Humidity	95% RH non-condensing
Vibration	30.6 g (10 Hz up to 2000 Hz)
Shock	510 g @ 6 ms duration
Sealing	IP50, standard; IP66 or IP67, optional

CANopen Interface

Protocol	CANopen Communication profile CiA 301 Device profile for encoder CiA 406 V3.2 class C2
Node Number	0 to 127 (default 127)
Baud Number	10 Kbaud to 1 Mbaud with automatic bit rate detection
NOTE: The standard settings as well as any customization in the software can be changed via LSS (CiA 205) and the SDO protocol (e.g. PDOs, scaling, heartbeat, node-ID, baud rate, etc.)	

Programmable CANopen Transmission Modes

Synchronis	When a synchornization telegram (SYNC) is received from another bus node, PDOs are transmitted independently
Asynchronis	A PDO message is triggered by an internal event (e.g. change of measured value, internal timer, etc.)

SAE J1939

CAN physical layer	ISO 11898 (High Speed CAN)
Protocol	ISO 11898 (High Speed CAN)
Baud Rate	Auto-Baud-Detection
Standard Preset configuration	(other configurations on request)
Direction of counting	CCW (view from shaft end)
ECU-address	0x0A
Process data Identifier	0x18FF000A
PGN	0xFF00
Process data mapping	Byte 0-3 32 Bit Position Value Byte 4 8 Bit Error Register PDU timer and Position Preset can be adjusted by PGN configuration 0xEF00 (Prop. A)
PDU - Time	50ms (default)
Configuration - PGN	0xEF 00 (Prop. A)
Byte 0	0x01
Byte 1	0xFF
Byte 2	PDU time LSB
Byte 3	PDU time MSB
Byte 4	Preset LSB
Byte 5,6	Preset
Byte 7	Preset MSB

SSI Interface

Clock Input	Via opto coupler
Clock Frequency	100Kz to 500Kz, Higher frequencies may be available. Contact Customer Service.
Data Output	RS485/RS422 compatible
Output Code	Gray or binary
SSI Output	Angular position value
Parity Bit	Optional (even/odd)
Error Bit	Optional
Turn On Time	< 1.5 sec
Pos Counting Dir	Connect DIR to GND for CW Connnect DIR to VDC for CCW (when viewed from shaft end)
Set to Zero	Yes, see Technical Bulletin TB529: Understanding EPC's SSI Encoders
Protection	Galvanic Isolation with SSI option

1-800-366-5412 | encoder.com | sales@encoder.com
© 2026 Encoder Products Company_v1.6_REV 06/09/2026

IO-Link Interface

Smart Sensor Profile (SSP):	• 2.8 Adjustable Switching Sensor, multi channel • 4.2.1 Measuring and Switching Sensor, high resolution, 1 channel • 4.2.2 Measuring and Switching Sensor, high resolution, 2 channel
Baud rate:	COM 3 230.4 kBit/s
Note:	The standard settings and customer specific adjustments in the parameterization can be set using ISDUs, e.g. scaling, direction of rotation, etc.

1-800-366-5412 | encoder.com | sales@encoder.com
© 2026 Encoder Products Company_v1.6_REV 06/09/2026

MODEL A25SB - ABSOLUTE SHAFT ENCODER

MODEL A25SB 2.5" FLANGE MOUNT (MA)

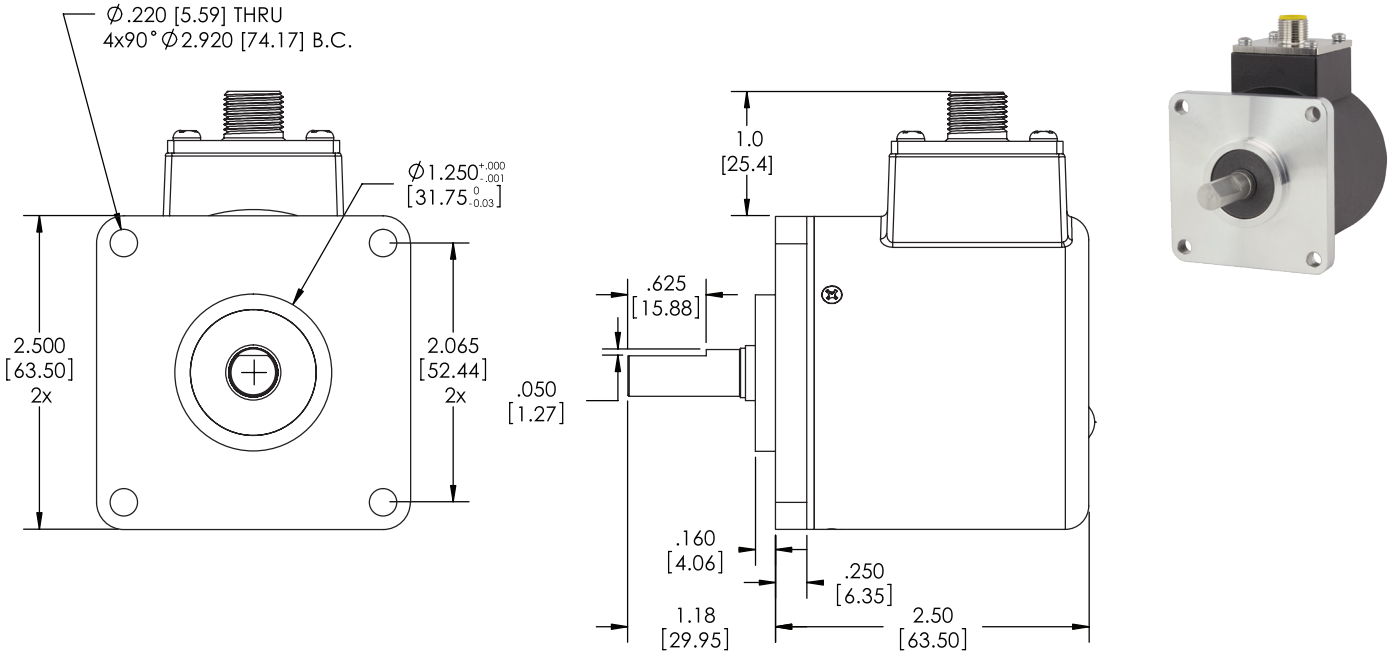

MODEL A25SB 2.5" SERVO MOUNT (MC)

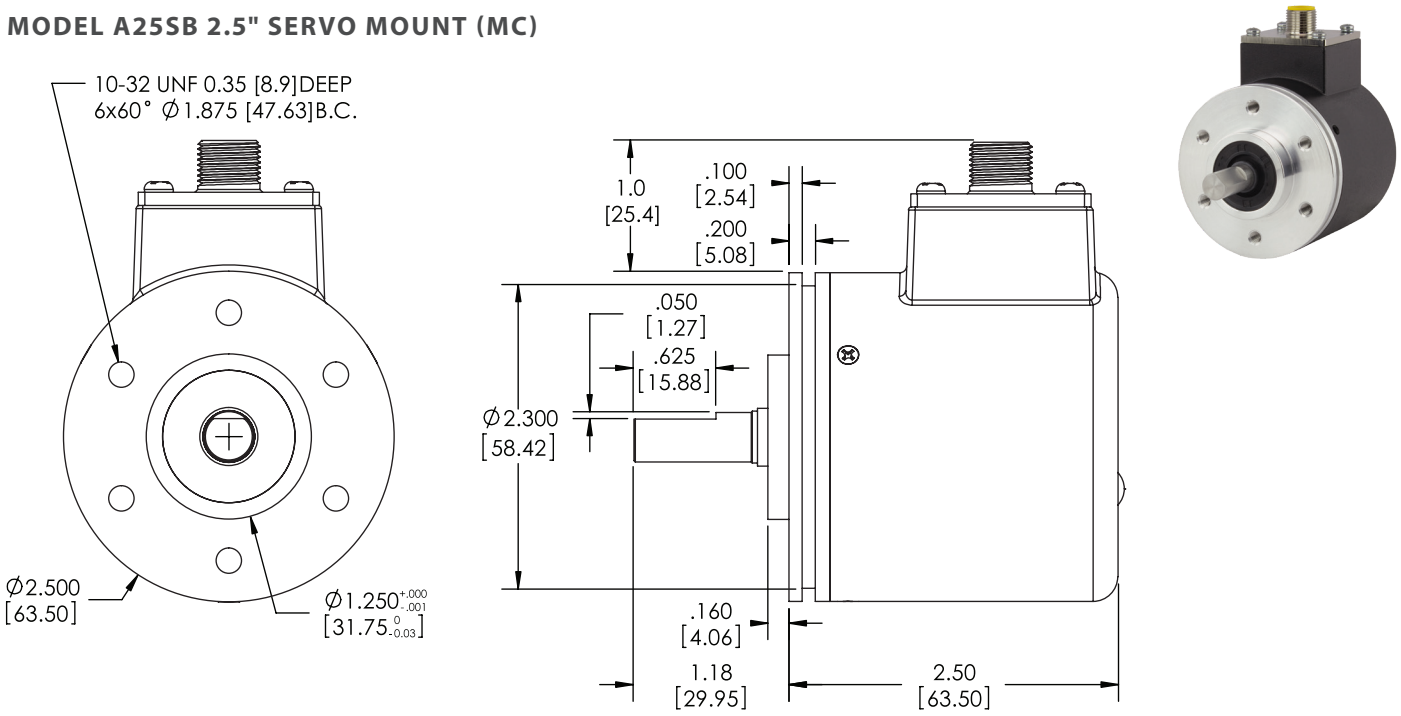

Primary dimensions are in inches, secondary dimensions [mm] in brackets for reference only.

1-800-366-5412 | encoder.com | sales@encoder.com
© 2026 Encoder Products Company_v1.6_REV 06/09/2026

CONNECTOR WIRING TABLE

A complete list of EPC supplied mating connectors, cables, and cordsets can be found under Accessories at encoder.com.

For EPC-supplied mating cables, refer to wiring table provided with cable. For CE (Conformity European) requirements, use M12 cordset with shield connected to M12 coupling nut. Trim back and insulate unused wires.

SSI Encoders
8-pin M12

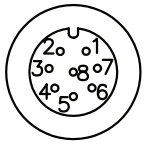

Function	Pin
Ground (GND)	1
+VDC	2
SSI CLK+	3
SSI CLK-	4
SSI DATA+	5
SSI DATA-	6
PRESET	7
DIR	8
Shield	Housing

CANopen and SAE J1939 Encoders
5-pin M12

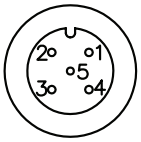

Function	Pin
+VDC	2
Ground (GND)	3
CAN_{High}	4
CAN_{Low}	5
CAN_{GND} / Shield	1

IO-Link Encoders
5-pin M12

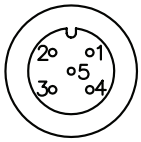

Function	Pin
L+	1
L-	3
C/Q	4
I	2
N/C	5

Note: IO-Link only uses 4 of the 5 pins.
Pin 5 is not used.

Page 5 of 5
© 2026 Encoder Products Company_v1.6_REV 06/09/2026