MODEL A58HB - ABSOLUTE HOLLOW BORE ENCODER



Ø58 mm

SSI Synchronous Serial Interface

IO-Link

CANopen SAE J1939

FEATURES

Single Turn/Multi-Turn Absolute Encoder (16 Bit ST / 43 Bit MT)
SSI, CANopen®, SAE J1939, and IO-Link communication protocols
Maintenance-free and environmentally friendly magnetic design
Energy harvesting magnetic multi-turn technology
No gears or batteries
58 mm (2.28") diameter blind hollow bore encoder
Flex mount eliminates couplings and is ideal for motors and shafts
Meets CE/EMC standards for immunity and emissions

The Model A58HB absolute encoder offers a high performance solution for your absolute feedback needs. It provides maintenance-free feedback thanks to its innovative battery-free and gear-free multi-turn technology. This encoder is especially suited for applications where position information must be retained after loss of system power. Its rugged magnetic technology and high IP rating make the Model A58HB an excellent choice, even in tough industrial environments. Available with bores up to 3/8" or 14 mm and two flexible mounting options, the Model A58HB is easily designed into a variety of applications.

COMMON APPLICATIONS

Robotics, Telescopes, Antennas, Medical Scanners, Wind Turbines, Elevators, Lifts, Motors, Automatic Guided Vehicles, Heavy Duty Vehicles, Cranes, Rotary and X/Y Positioning Tables

MODEL A58HB ORDERING GUIDE

Blue type indicates price adder options

Model		Mechanical			Electrical								
A58HB	–	06	SQ	–	14	18	CO	A	B	V2	–	RMJ	–	NR

MODEL
A58HB Absolute series blind hollow bore encoder

BORE SIZE
06 6 mm
07 7 mm
08 8 mm
10 10 mm
12 12 mm
14 14 mm
A5 0.250", 1/4"
A9 0.375", 3/8"

MOUNTING TYPE
SQ 108 mm BC flex arm
SR 63 mm BC 2-pt. flex mount

SINGLE TURN RESOLUTION[10]
01 to 16 Bit

MULTI- TURN RESOLUTION[10]
00 Single Turn
01 to 43 Multi-Turn

COMMUNICATION PROTOCOL
CO CANopen[1]
CJ SAE J1939[2,3]
IO IO-Link[5,10]
SI SSI[4]

SOFTWARE REV
A Revision A

OUTPUT CODE
B Binary
G Gray[6]

INPUT VOLTAGE
5 5 VDC[6]
V2 5 to 32 VDC
V6 18 to 30 VDC[7]

CONNECTOR TYPE
RMJ 5-pin M12 radial mount[8]
RMK 8-pin M12 radial mount[6]

TERMINATING RESISTOR[9]
NR None (Std)
RS Internal resistor option (fixed 120 Ohm)

Notes:

1 Please refer to CANopen Interface Technical Reference Manual at encoder.com.
2 Please refer to Technical Bulletin TB-546: SAE J1939 Interface and Process Data at encoder.com.
3 SAE J1939 can transmit a maximum of 32 bits in process data. The sum of single turn and multiturn results in a maximum of 32 bits. This can be, for example, 16-bit ST and 16-bit MT.
4 Please refer to Technical Bulletin TB-529: Understanding EPC's SSI Encoders at encoder.com.
5 Please refer to IO-Link Technical Reference Manual at encoder.com.
6 Available with SSI only.
7 IO-Link only available with V6 input voltage (18-30VDC). V6 only available with IO-Link.
8 Available with CANopen,SAE J1939, and IO-Link only.
9 Terminating resistor available with CANopen and SAE J1939 only.
10 IO-Link encoders are only available in a Multi-turn configuration but they may be configured for single turn usage.

EPC RESERVES THE RIGHT TO UPDATE, REVISE AND AMEND ALL SOFTWARE AND TECHNICAL DATA OR CONTENT AT ANY TIME. EPC SHALL HAVE NO LIABILITY OF ANY KIND OR NATURE FOR ANY TECHNICAL ERRORS OR OMISSIONS IN ANY SOFTWARE OR TECHNICAL DATA.
See encoder.com for more information.

1-800-366-5412 | encoder.com | sales@encoder.com
© 2026 Encoder Products Company, v1.6_REV 06/09/2026

MODEL A58HB - ABSOLUTE HOLLOW BORE ENCODER

Electrical

Input Voltage	5 to 32 VDC max CANopen and J1939 5 VDC SSI Only 18 to 30 VDC IO-Link Only
Input Current	50 mA typical for 5 to 32 VDC 80 mA typical for 5 VDC 30 mA typical for 18 to 30 VDC
Power Consumption	0.5 W max 0.6 W max IO-Link
Resolution (Single)	01 to 16 bit
Resolution (Multi)	01 to 43 bit
Accuracy	<±0.0878°
Repeatability	<±0.0878°
CE/EMC	Immunity tested per EN 61000-6-2:2006 Emissions tested per EN 61000-6-3:2011

Mechanical

Max Shaft Speed	12000 RPM
Bore Depth	17mm (0.669")
User Shaft Radial Runout	0.005" max
Radial Shaft Load	Bearing life of $1.4x10^8$ revolutions: 17lbs (80 N)
Axial Shaft Load	Bearing life of $1.4x10^8$ revolutions: 11lbs (50 N)
Starting Torque	< 0.45oz-in typical
Housing	All metal with protective finish
Weight	5 oz typical

Environmental

Operating Temp	-40° C to 85° C
Storage Temp	-40° C to 100° C
Humidity	95% RH non-condensing
Vibration	30.6 g (10 Hz up to 2000 Hz)
Shock	510 g @ 6 ms duration
Sealing	IP67 , shaft sealed to IP65

CANopen Interface

Protocol	CANopen Communication profile CiA 301 Device profile for encoder CiA 406 V3.2 class C2
Node Number	0 to 127 (default 127)
Baud Number	10 Kbaud to 1 Mbaud with automatic bit rate detection
NOTE: The standard settings as well as any customization in the software can be changed via LSS (CiA 205) and the SDO protocol (e.g. PDOs, scaling, heartbeat, node-ID, baud rate, etc.)	

Programmable CANopen Transmission Modes

Synchronis	When a synchornization telegram (SYNC) is received from another bus node, PDOs are transmitted independently
Asynchronis	A PDO message is triggered by an internal event (e.g. change of measured value, internal timer, etc.)

SAE J1939

CAN physical layer	ISO 11898 (High Speed CAN)
Protocol	ISO 11898 (High Speed CAN)
Baud Rate	Auto-Baud-Detection
Standard Preset configuration	(other configurations on request)
Direction of counting	CCW (view from shaft end)
ECU-address	0x0A
Process data Identifier	0x18FF000A
PGN	0xFF00
Process data mapping	Byte 0-3 32 Bit Position Value Byte 4 8 Bit Error Register PDU timer and Position Preset can be adjusted by PGN configuration 0xEF00 (Prop. A)
PDU - Time	50ms (default)
Configuration - PGN	0xEF 00 (Prop. A)
Byte 0	0x01
Byte 1	0xFF
Byte 2	PDU time LSB
Byte 3	PDU time MSB
Byte 4	Preset LSB
Byte 5, 6	Preset
Byte 7	Preset MSB

1-800-366-5412 | encoder.com | sales@encoder.com
© 2026 Encoder Products Company, v1.6_REV 06/09/2026

MODEL A58HB - ABSOLUTE HOLLOW BORE ENCODER

IO-Link Interface

Smart Sensor Profile (SSP):	• 2.8 Adjustable Switching Sensor, multi channel • 4.2.1 Measuring and Switching Sensor, high resolution, 1 channel • 4.2.2 Measuring and Switching Sensor, high resolution, 2 channel
Baud rate:	COM 3 230.4 kBit/s
Note:	The standard settings and customer specific adjustments in the parameterization can be set using ISDUs, e.g. scaling, direction of rotation, etc.

SSI Interface

Clock Input	Via opto coupler
Clock Frequency	100Kz to 500Kz, Higher frequencies may be available. Contact Customer Service.
Data Output	RS485/RS422 compatible
Output Code	Gray or binary
SSI Output	Angular position value
Parity Bit	Optional (even/odd)
Error Bit	Optional
Turn On Time	< 1.5 sec
Pos Counting Dir	Connect DIR to GND for CW Connnect DIR to VDC for CCW (when viewed from shaft end)
Set to Zero	Yes, see Technical Bulletin TB529: Understanding EPC's SSI Encoders
Protection	Galvanic Isolation with SSI option

1-800-366-5412 | encoder.com | sales@encoder.com
© 2026 Encoder Products Company, v1.6_REV 06/09/2026

MODEL A58HB - ABSOLUTE HOLLOW BORE ENCODER

MODEL A58HB 108 MM BC FLEX ARM (SQ)

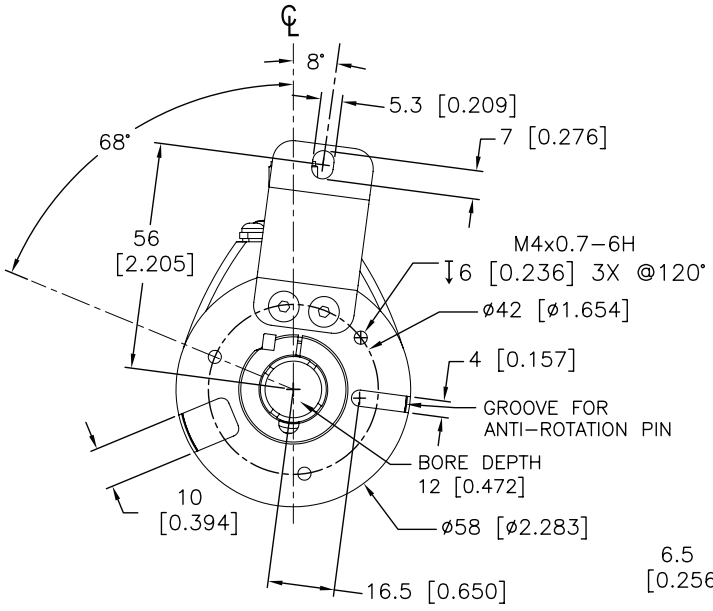

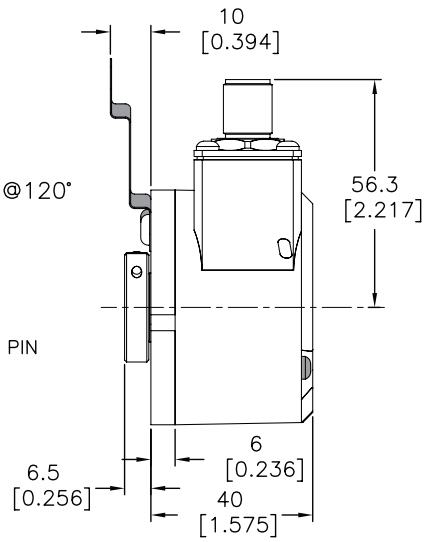



MODEL A58HB 63 MM 2 PT. FLEX MOUNT (SR)

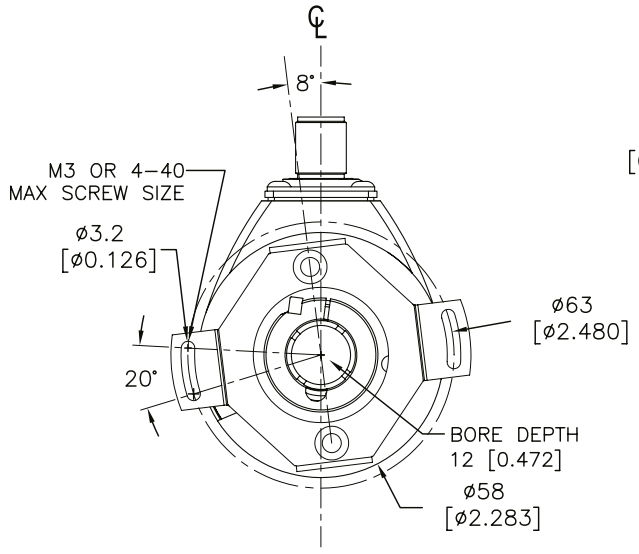

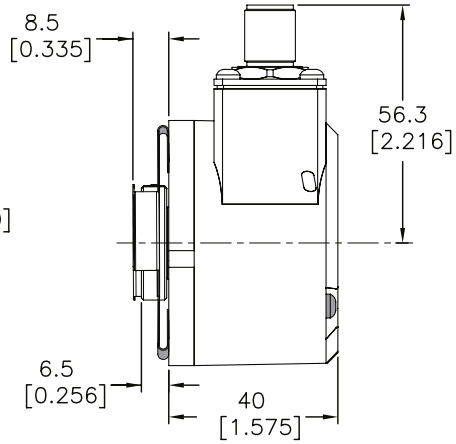



Primary dimensions are in mm, secondary dimensions [inches] in brackets for reference only.

1-800-366-5412 | encoder.com | sales@encoder.com
© 2026 Encoder Products Company, v1.6_REV 06/09/2026

MODEL A58HB - ABSOLUTE HOLLOW BORE ENCODER

CONNECTOR WIRING TABLE

A complete list of EPC supplied mating connectors, cables, and cordsets can be found under Accessories at encoder.com.

For EPC-supplied mating cables, refer to wiring table provided with cable. For CE (Conformity European) requirements, use M12 cordset with shield connected to M12 coupling nut. Trim back and insulate unused wires.

SSI Encoders
8-pin M12

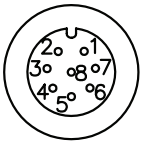

Function	8-Pin M12
Ground (GND)	1
+VDC	2
SSI CLK+	3
SSI CLK-	4
SSI DATA+	5
SSI DATA-	6
PRESET	7
DIR	8
Shield	Housing

CANopen and SAE J1939 Encoders
5-pin M12

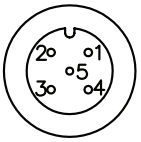

Function	5-Pin M12
+VDC	2
Ground (GND)	3
CAN_{High}	4
CAN_{Low}	5
CAN_{GND} / Shield	1
M12 connector is connected to encoder housing.	

IO-Link Encoders
5-pin M12

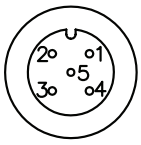

Function	Pin
L+	1
L-	3
C/Q	4
I	2
N/C	5

Note: IO-Link only uses 4 of the 5 pins.
Pin 5 is not used.

© 2026 Encoder Products Company, v1.6_REV 06/09/2026