# MODEL A58HE - ETHERNET ABSOLUTE ENCODER

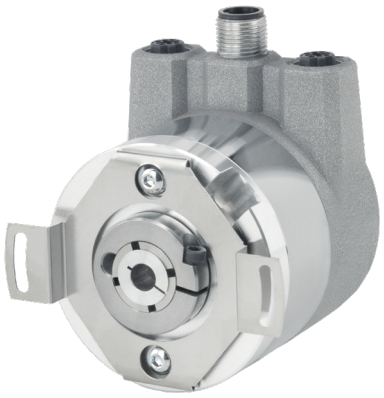

Ø58 mm

## FEATURES

Single turn/multi-turn absolute encoder (16 Bit ST / 43 Bit MT)
Available in three industrial ethernet protocols:
- EtherCAT® with CoE, FoE, EoE – device profile: CiA DS-406 V4.0.2, Class 3
- EtherNet/IP™ position sensor, DLR
- PROFINET® I-O (CC-C) – device profile: switchable V4.1, Class 3, 4

Maintenance-free and environmentally friendly magnetic design
Energy harvesting magnetic multi-turn technology
No gears or batteries
Low TCO and easy provisioning with internal web server
Color LEDs for operating condition, bus status, link activity
Compact design with bus cover
58 mm (2.28") diameter package

The Model A58HE is an EtherCAT®, EtherNet/IP™, or PROFINET® protocol, multi-turn absolute encoder designed for heavy duty industrial applications. It is particularly suited to applications where Ethernet-based connectivity is required, and the encoder must retain position information after power-off events. Easily designed into a wide variety of system applications, the A58HE plugs directly into your network with minimal provisioning for rapid deployment, facilitating data exchange among myriad networked devices. The Model A58HE retains absolute position information even after a power loss, facilitating speedy system recovery at start-up without the need for system re-homing.

Ready for Industry 4.0 and for the Industrial Internet of Things (IIoT), data exchange between the Model A58HE and other applications has no influence on the control loop. The Model A58HE is non-reactive and can work independently from the PLC or master, transferring data through network gateways to other automation networks and sites, and up to the cloud for analysis.

## COMMON APPLICATIONS

Robotics, Telescopes, Antennas, Medical Scanners, Wind Turbines, Elevators, Lifts, Motors, Automatic Guided Vehicles, Rotary and X/Y Positioning Tables

## MODEL A58HE ORDERING GUIDE

Blue type indicates price adder options. Not all configuration combinations may be available. Contact Customer Service for details.

**Mechanical** | **Electrical**

| A58HE | – | 06 | SR | – | 16 | 43 | EC | U | B | V4 | RNB |
|---|---|---|---|---|---|---|---|---|---|---|---|

**MODEL**
**A58HE** Absolute Series blind hollow bore encoder

**BORE SIZE**
**06** 6 mm
**07** 7 mm
**08** 8 mm
**10** 10 mm
**12** 12 mm
**14** 14 mm
**15** 15 mm
**A5** 0.250", 1/4"
**A9** 0.375", 3/8"

**MOUNTING TYPE**
**SR** 63 mm BC 2-pt. flex mount

**SINGLE TURN RESOLUTION**
**16** Single turn

**MULTI-TURN RESOLUTION**
**00** Single turn[1]
**43** Multi-turn[2]

**COMMUNICATION PROTOCOL**
**EC** EtherCAT
**IP** EtherNet/IP
**PN** PROFINET

**SOFTWARE REV**
**U** Revision U (EtherCAT & EtherNet/IP)
**W** Revision W (PROFINET only)

**OUTPUT CODE**
**B** Binary

**VOLTAGE**
**V4** 10V to 32V

**CONNECTOR TYPE[3]**
**RNB** RNB bus cover with 3xM12

**NOTES:**
1 Single turn encoders cannot be configured for multi-turn resolution.
2 Customer configures actual resolution at setup.
3 For mating connectors, cables, and cordsets see encoder.com/encoder-accessories

EtherCAT® (Ethernet for Control and Automation Technology) is a registered trademark and patented technology, licensed by Beckhoff Automation GmbH, Germany.
EtherNet/IP™ is a trademark of ODVA, Inc.
PROFINET® is a registered trademark and patented technology, licensed by PU (PROFIBUS & PROFINET) International.


1-800-366-5412 | encoder.com | sales@encoder.com
© 2025 Encoder Products Company, v1.2_20251112

# MODEL A58HE - ETHERNET ABSOLUTE ENCODER

## MODEL A58HE SPECIFICATIONS

**Electrical**

Power Supply ..... 10 VDC up to 32 VDC
Current Consumption ..... typ. 125 mA
Power Consumption ..... typ. 3 W

**Sensor Specification**

Internal Cycle Time ..... 50 µs
Resolution
- Single Turn ..... Up to 65,536 steps/360° (16 bit)
- Multi-Turn ..... 43 bit

Accuracy
- Single Turn ..... ± 0.0878° (≤ 12 bit)
- Single Turn, Repeat Accuracy ..... ± 0.0878° (≤ 12 bit)

Technology
- Single Turn ..... Innovative Hall-sensor technology
- Multi-Turn ..... Patented energy-harvesting technology, no battery and no gears

Turn on time ..... < 1.5 s

**Interface**

Interface ..... Industrial Ethernet
Protocol ..... EtherCAT, EtherNet/IP, PROFINET-IO (CC-C)
Device Profile ..... EtherCAT: CiA DS-406 V4.0.2, Class 3; EtherNet/IP: Conformance per CT-18, Specification Vol 2, Ed 1.29, CIP Specification Vol 1, Ed 3.31; PROFINET: V4.1, Class 3, 4
Data Transfer ..... 100BASE-TX
Cycle time ..... EtherCAT: up to 50 µs
EtherNet/IP: 1 ms
PROFINET: 250 µs, applicable for up to 125 µs
Code ..... Binary, CW default, programmable
Programmable Parameters ..... Steps per revolution; counts of revolution; preset; scale; counting direction
EtherCAT: 2x 8 cam switches; DC-Mode
EtherNet/IP: CAMs, warning messages
PROFINET: MRPD; MRP; LLDP; IRT
See associated protocol Technical Reference Manual for full list of programmable attributes for that protocol.
Diagnostic LED ..... Traffic and connection management: L/A1: Port 1 (IN) L/A2: Port 2 (OUT)
Status LED ..... STAT, MOD: status of encoder and bus

**Mechanical**

Flange ..... Blind hollow bore
Flange Material ..... Aluminum
Shaft Material ..... Stainless steel
Shaft Length ..... 17 mm
Insertion depth
- min ..... 10 mm
- max ..... 19 mm

Housing Cap ..... Steel case chrome-plated, magnetic shielding
Connection Cover ..... Die cast aluminum, powder coated
Weight ..... 14.462 oz / 410 g approx
Max Radial Shaft Load ..... 80 N (17.9 lb)
Max Axial Shaft Load ..... 50 N (11.2 lb)
Starting Torque ..... Approximately 1.6 Ncm (2.226 oz-in) at ambient temperature.
Max Shaft Speed ..... 6000 RPM

**Bearings**

Bearings Type ..... 2 precision ball bearings
Nominal Service Life ..... $1 \times 10^9$ revs. at 100% rated shaft load
$1 \times 10^{10}$ revs. at 40% rated shaft load
$1 \times 10^{11}$ revs. at 20% rated shaft load

**Environmental**

Operating Temp ..... -40° to 85° C
Storage Temp ..... -40° to 100° C
Sealing ..... IP65 tested per EN 60529
ESD ..... 8 kV tested per EN 61000-4-2
Burst ..... 2 kV tested per 61000-4-4
EMC ..... EN 61000-6-2; EN 61000-6-3
Vibration ..... 200 m/s$^2$ (10 Hz up to 1000 Hz)
(20.3 g [10Hz up to 1000 Hz])
tested per EN 60068-2-6
Shock ..... 5000 m/s$^2$ (6 ms)
509.8 g (6 ms)
tested per EN 60068-2-27
Design ..... According to DIN VDE 0160

## NETWORK BUS CONNECTOR PINOUT

Bus cover with 3x M12x1. For EPC-supplied mating cables, wiring table is provided with cable. Trim back and insulate unused wires.

**Female Connector Port1 (IN)**

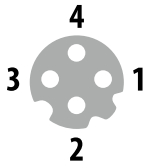


| Function | M12x1, 4-pin, D-coded |
|---|---|
| Tx+ | 1 |
| Rx+ | 2 |
| Tx- | 3 |
| Rx- | 4 |

**Power**

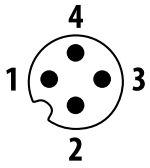


| Function | M12x1, 4-pin, A-coded |
|---|---|
| (+) Vcc | 1 |
| n. c. | 2 |
| GND | 3 |
| n. c. | 4 |

**Female Connector Port2 (OUT)**

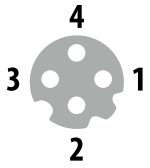


| Function | M12x1, 4-pin, D-coded |
|---|---|
| Tx+ | 1 |
| Rx+ | 2 |
| Tx- | 3 |
| Rx- | 4 |

EPC RESERVES THE RIGHT TO UPDATE, REVISE AND AMEND ALL SOFTWARE AND TECHNICAL DATA OR CONTENT AT ANY TIME. EPC SHALL HAVE NO LIABILITY OF ANY KIND OR NATURE FOR ANY TECHNICAL ERRORS OR OMISSIONS IN ANY SOFTWARE OR TECHNICAL DATA.
See encoder.com for more information.


1-800-366-5412 | encoder.com | sales@encoder.com
© 2025 Encoder Products Company, v1.2_20251112

# MODEL A58HE - ETHERNET ABSOLUTE ENCODER

## MODEL A58HE 63 MM 2 PT. FLEX MOUNT (SR)

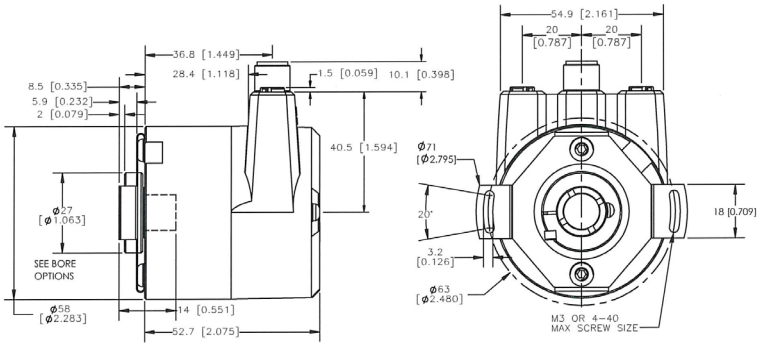


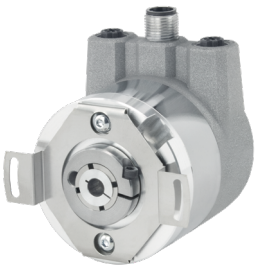

*Primary dimensions are in mm, secondary dimensions SI units [inches] in brackets or reference only.*


1-800-366-5412 | encoder.com | sales@encoder.com
© 2025 Encoder Products Company, v1.2_20251112