SHAFT SIZE	ØD	L1	d	L2
6mm	6 [0.236]	12 [.472]	0.7 [0.028]	10 [0.394]
10mm	10 [0.394]	20 [0.787]	no flat	n/a

REVISIONS			
REV.	DESCRIPTION	APPR	DATE
A	INITIAL RELEASE	07938	2/16/2021

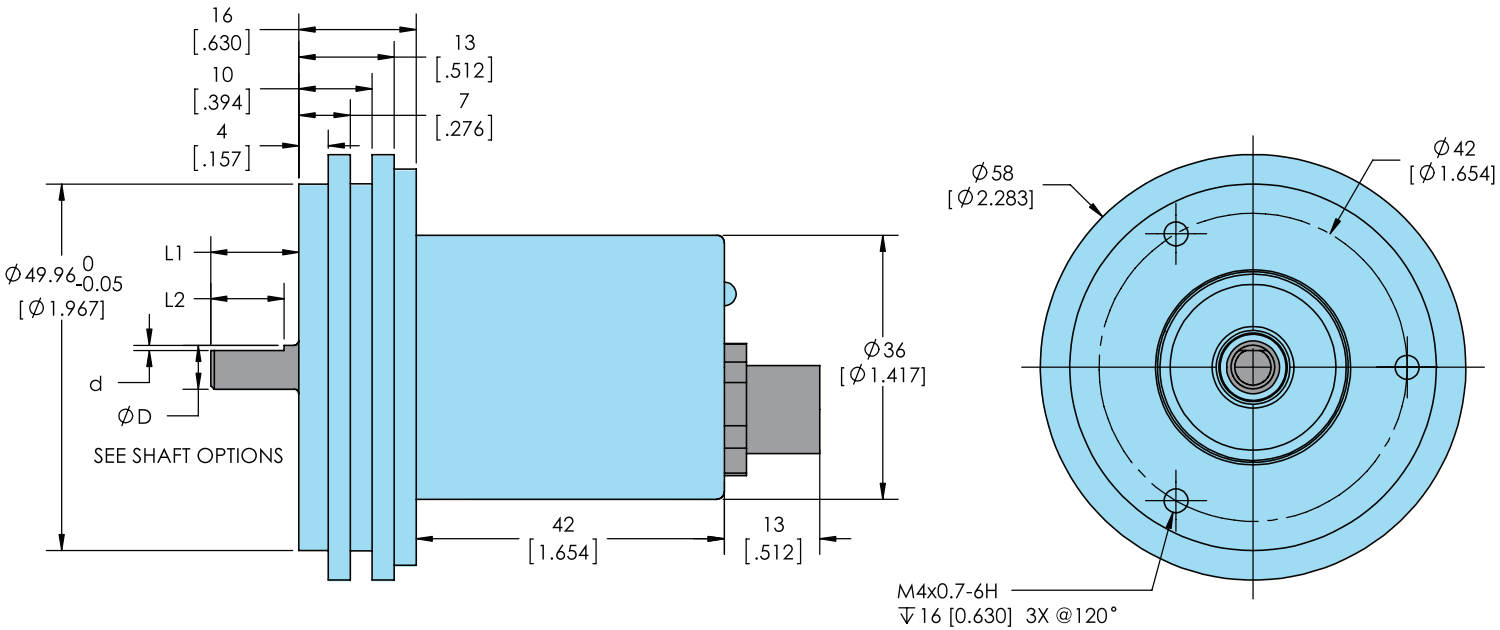

NOTE:
Primary dimensions are in mm, secondary dimensions [inches] in brackets for reference only.

THIRD ANGLE PROJECTION		ENCODER PRODUCTS COMPANY	www.encoder.com
DIMENSIONS ARE IN mm		APPROVALS / DATE	NAME AND TITLE
ISSUE DATE: 2/16/2021	TOLERANCES	DRAWN MJH/MJW 06/15/20	A58SB- SYNCHRO FLANGE, AXIAL CONNECTOR
NEXT ASSEM.	DECIMAL ± .13	CHECKED	
PREV. ASSEM.	DECIMAL ± .3	RESP ENG	DWG. NO. A58SB-MK-AXIAL CONN — REV. A
PART NUMBER	ANGULAR ± 1	MFG ENG	
		QUAL ENG	SCALE: NONE — DWG. SIZE: B — SHEET 1 OF 1