SHAFT SIZE	ØD	L1	d	L2
6mm	6 [0.236]	12 [0.472]	0.70 [0.028]	10 [0.394]
10mm	10 [0.394]	20 [0.787]	no flat	n/a
10mm 2	10 [0.394]	20 [0.787]	1 [0.039]	15 [0.591]

REVISIONS			
REV.	DESCRIPTION	APPR	DATE
A	INITIAL RELEASE	07938	2/16/2021
B	HOUSING DESIGN CHANGE	08065	4/26/2021

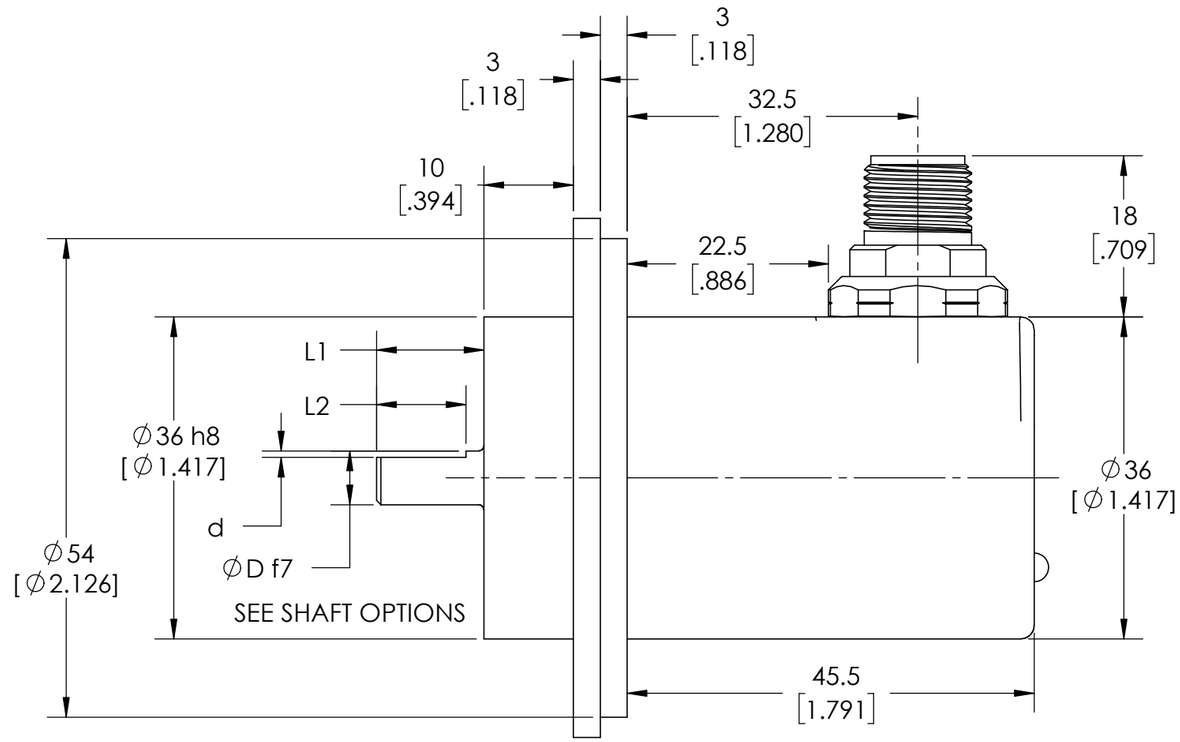

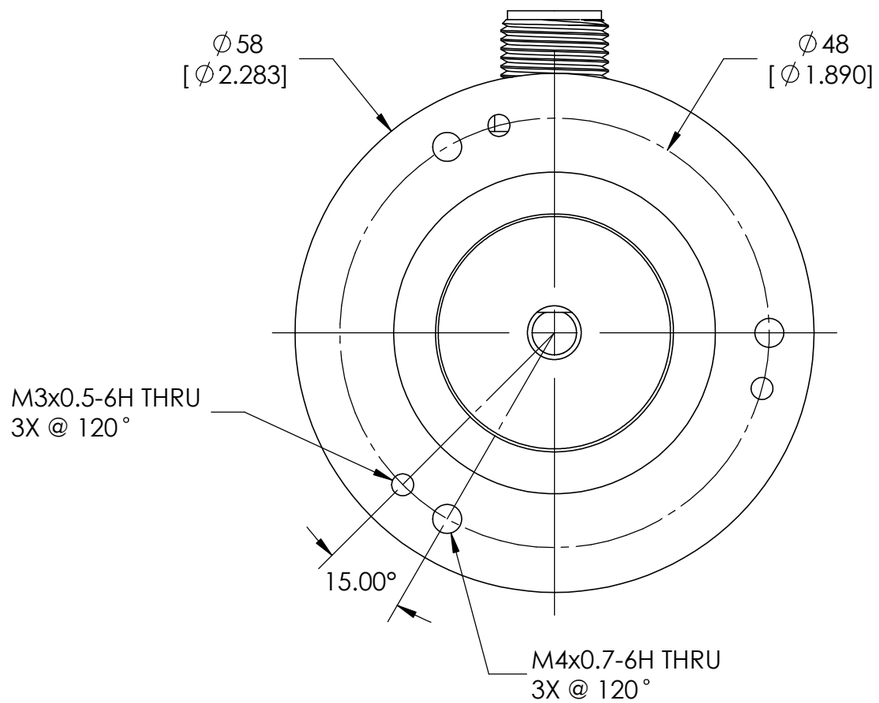

NOTE:
1. PRIMARY DIMENSIONS ARE IN mm, SECONDARY DIMENSIONS [INCHES] IN BRACKETS FOR REFERENCE ONLY.
2. 10mm SHAFT WITH FLAT ONLY AVAILABLE WITH S8 SEAL CODE.

THIRD ANGLE PROJECTION		ENCODER PRODUCTS COMPANY	www.encoder.com
		APPROVALS	DATE
DIMENSIONS ARE IN mm		DRAWN MJW	06/18/20
ISSUE DATE: 2/16/2021	TOLERANCES	CHECKED	
NEXT ASSEM.	DECIMAL ± .13	RESP ENG	
PREV. ASSEM.	DECIMAL ± .3	MFG ENG	
PART NUMBER	ANGULAR ± 1	QUAL ENG	

NAME AND TITLE: A58SB-CLAMPING FLANGE, RADIAL CONNECTOR

DWG. NO. A58SB-MH-RADIAL CONN — REV. C

SCALE: NONE | DWG. SIZE: B | SHEET 1 OF 1