SHAFT SIZE	ØD	L1	d	L2
6mm	6 [0.236]	12 [0.472]	0.7 [0.028]	10 [0.394]
8mm	8 [0.315]	19 [0.748]	0.5 [0.020]	15 [0.591]
10mm	10 [0.394]	20 [0.787]	1 [0.039]	15 [0.591]
3/8"	9.5 [0.375]	20 [0.787]	1.2 [0.047]	10 [0.394]

REVISIONS

REV.	DESCRIPTION	DATE
A	CHANGED TITLE AND DWG NO. ECO 07526	1/11/19
B	NEW CHART FOR SHAFT DIM ECO 07730	9/12/19
C	UPDATED STANDARD TOLERANCE ECO 07938	2/16/21
D	UPDATED CHART FOR SHAFT DIM ECO 09020	11/10/25

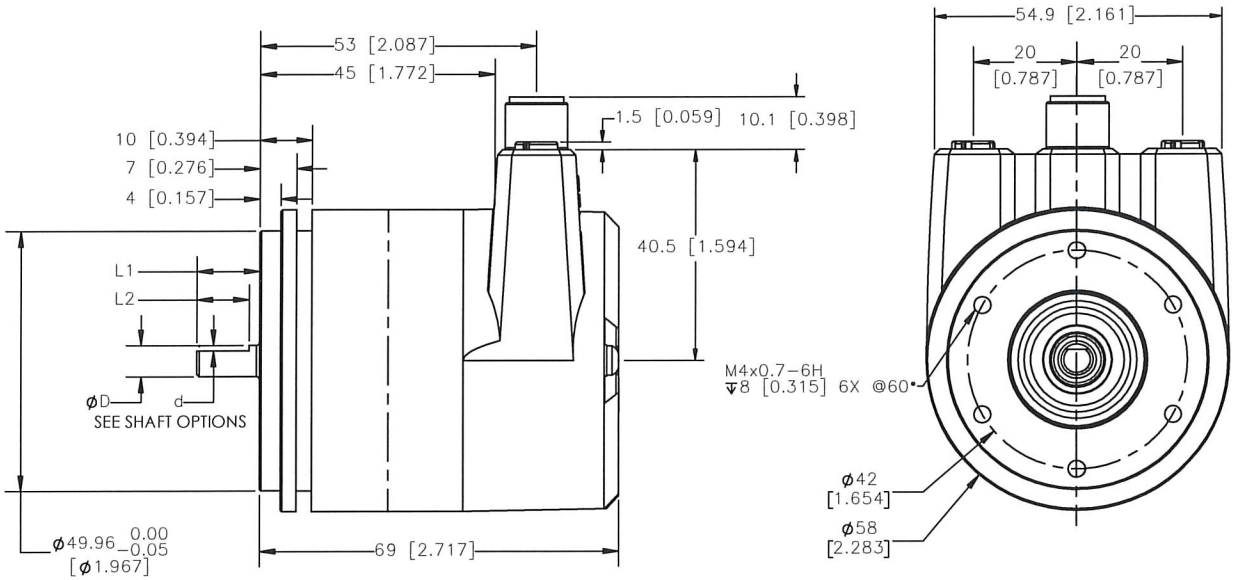

NOTE:

Primary dimensions are in mm, secondary dimensions [inches] in brackets for reference only.

THIRD ANGLE PROJECTION

DIMENSIONS ARE IN mm

ISSUE DATE: 7/25/18

NEXT ASSEM.

PREV. ASSEM.

PART NUMBER

TOLERANCES: DECIMAL ± .13; DECIMAL ± .3; ANGULAR ± 1

ENCODER PRODUCTS COMPANY

www.encoder.com

APPROVALS	DATE
DRAWN GMA	7/24/18
CHECKED SW	11/10/25
RESP ENG JB	11/10/25
MFG ENG MW	11/10/25
QUAL ENG SC	11/10/25

NAME AND TITLE: MODEL A58SE SYNCHRO FLANGE

DWG. NO. A58SE-MK

REV. D

SCALE: NONE | DWG. SIZE: B | SHEET 1 OF 1