SHAFT SIZE	øD	L1	d	L2
6mm	6 [0.236]	12 [0.472]	0.7 [0.028]	10 [0.394]
8mm	8 [0.315]	20 [0.787]	0.5 [0.020]	15 [0.591]
10mm	10 [0.394]	20 [0.787]	no flat	n/a
3/8"	9.5 [0.375]	20 [0.787]	1.2 [0.047]	10 [0.394]

REVISIONS		
REV	DESCRIPTION	DATE
–	INITIAL RELEASE PER ECO 07730	09/12/19
A	UPDATED STANDARD TOLERANCE ECO 07938	2/16/2021
B	UPDATED CHART FOR SHAFT LENGTH ECO 09020	11/10/2025

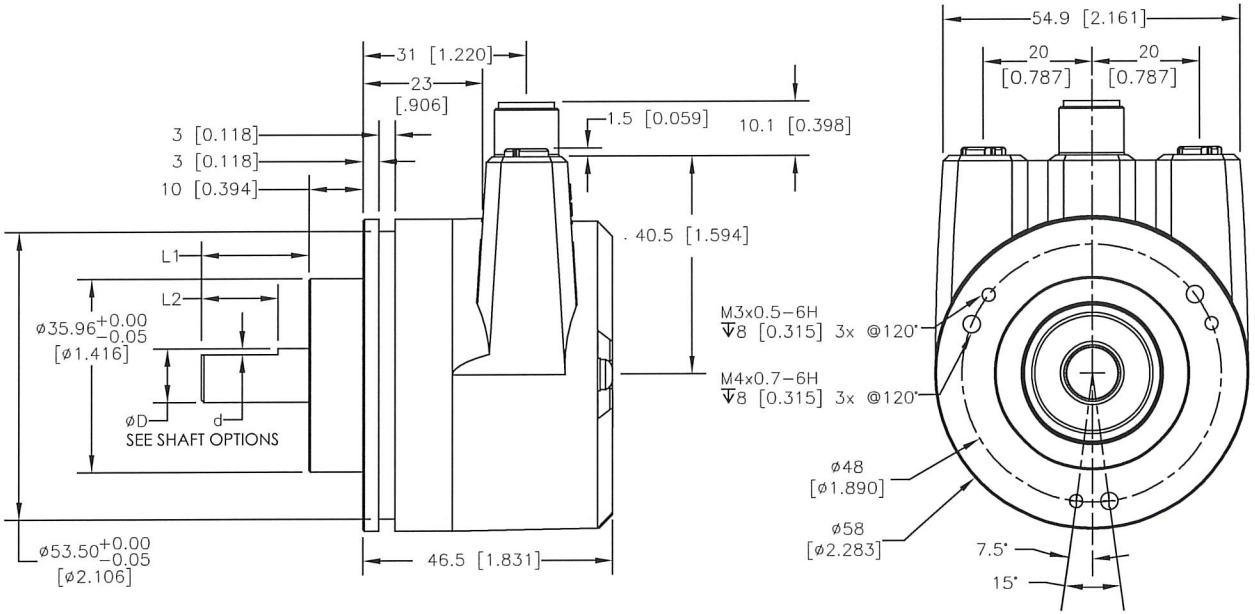

NOTE:

Primary dimensions are in mm, secondary dimensions [inches] in brackets for reference only.

THIRD ANGLE PROJECTION

ENCODER PRODUCTS COMPANY

www.encoder.com

DIMENSIONS ARE IN mm		APPROVALS	DATE
ISSUE DATE 08/16/19	TOLERANCES	DRAWN GMA	08/14/2019
NEXT ASSEM.	DECIMAL ± .13	CHECKED SW	11/10/2025
PREV. ASSEM.	DECIMAL ± .3	RESP. ENG. JB	11/10/2025
PART NUMBER	ANGULAR ± 1	MFG ENG. MW	11/10/2025
		QUAL. ENG. SC	11/10/2025

NAME AND TITLE: MODEL A58SE CLAMPING FLANGE COMPACT

DWG NUMBER: A58SE−MP REV. B

DWG SIZE B | SCALE NONE | SHEET 1 OF 1