DR011

Direct Replacement Encoder for BEI EX152



EPC Model DR011



BEI EX152

The **DR011** is the smart direct replacement choice for the BEI EX152 encoder commonly used on postal sorting equipment, baggage systems, and packaging/conveying equipment. This exact replacement has the added benefit of an attached cable, saving a technician time by not having to solder wires to a circuit board. Improved sealing means a longer life with increased protection.

Features

- High precision 1.50" incremental encoder
- Stainless steel 1/4" OD shaft
- Quadrature A & B channels
- 1000 CPR
- Push-Pull output
- Servo mount encoder with 4-40 x 0.30" deep mounting holes on a 1.100" bolt circle
- 18" cable with strain relief
- IP50 sealing
- Shaft speeds up to 7,500 RPM

Contact Customer Service for pricing. Discounts available for volume orders.

The Accu-Coder® Advantage

- *US-based since 1969*
- *Industry-best 3-year warranty*
- *Exceptional customer service*
- *Fast lead times – contact us for lead times and expedite options*

ACCU-CODER® by Encoder Products Company

© 2023 Encoder Products Company. **DR011 Datasheet** REV 04/20/2023

DR011

Direct Replacement Encoder for **BEI EX152**

MODEL DR011 SPECIFICATIONS

Electrical

Input Voltage	4.75 to 28 VDC max for temperatures up to 70° C
Input Current	100 mA max with no output load
Input Ripple	100 mV peak-to-peak at 0 to 100 kHz
Output Format	Incremental – Two square waves in quadrature with channel A leading B for clockwise shaft rotation, as viewed from the encoder mounting face. See Waveform Diagrams below.
Output Type	Push-Pull – 20 mA max per channel
Freq Response	100 kHz
Noise Immunity	Tested to BS EN61000-4-2; IEC801-3; BS EN61000-4-4; DDENV 50141; DDENV 50204; BS EN55022 (with European compliance option); BS EN61000-6-2; BS EN50081-2
Symmetry	180° (±18°) electrical at 100 kHz output
Quad Phasing	90° (±22.5°) electrical at 100 kHz output
Min Edge Sep	67.5° electrical at 100 kHz output
Rise Time	Less than 1 microsecond
Accuracy	0.017° mechanical (1.0 arc minutes) from one cycle to any other cycle.

Mechanical

Max Speed	7500 RPM. Higher shaft speeds may be achievable, contact Customer Service.
Shaft Size	0.250" outside diameter
Shaft Rotation	Bi-directional
Radial Shaft Load	5 lb
Axial Shaft Load	3 lb
Starting Torque	0.14 oz-in typical 4.0 oz-in typical for -40° C operation
Moment of Inertia	2.8 x 10^{-4} oz-in-sec^2
Max Acceleration	1 x 10^5 rad/sec^2
Electrical Conn	18" cable (foil and braid shield, 24 AWG conductors)
Housing	Black non-corrosive finish
Bearings	Precision ABEC ball bearings
Mounting	1.3115" Servo Mounting face; see dimensions
Weight	3.10 oz typical

Environmental

Operating Temp	0° to 70° C
Storage Temp	-25° to 85° C
Humidity	98% RH non-condensing
Vibration	10 g @ 58 to 500 Hz
Shock	50 g @ 11 ms duration

DR011 Dimensions

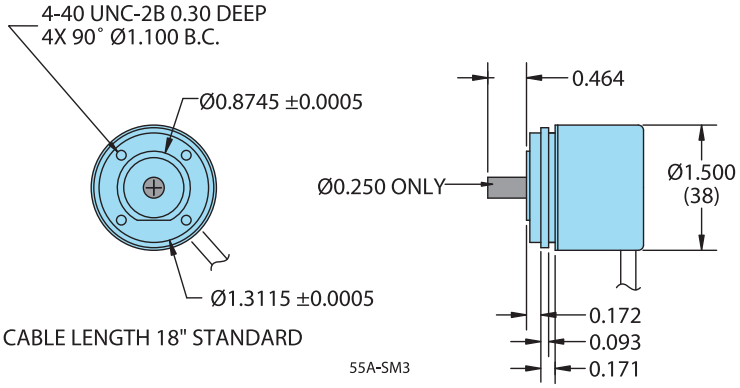

DR011 Waveform Diagram

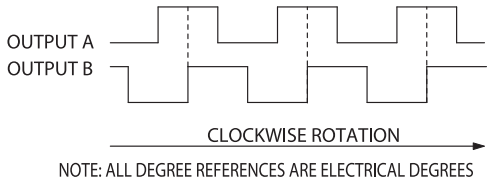

NOTE: ALL DEGREE REFERENCES ARE ELECTRICAL DEGREES

DR011 Wiring Table

Function	Cable Color
COM	Black
+VDC	White
A	Brown
B	Red
Shield	Bare

Don't see the exact encoder you need?

*Call **(800) 366-5412** and our Technical Sales Department will cross-reference your encoder to the correct EPC model.*

© 2023 Encoder Products Company. **DR011 Datasheet** REV 04/20/2023