D R 2 1 R - *Direct Replacement Encoder for select **Renco RCH20D, RHS25D,** and **RCM21D** models*

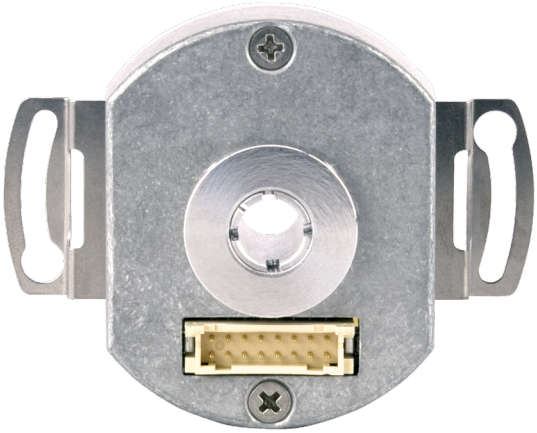

EPC Model DR21R

The Accu-Coder® DR21R is a highly customized, Direct Replacement Encoder with a unique, OEM-specific ABS stepped voltage output channel. DR21R configurations replace select Renco RCH20D, RHS25D, and RCM21D models* originally installed on legacy F, H, W, N and HSM MPL servo motor models. An exact mechanical and electrical cross-reference for these obsolete Renco configurations, the DR21R also incorporates EPC's advanced Opto-ASIC sensing technology, providing superior thermal stability and signal reliability.

**These models have been discontinued by the manufacturer, and are increasingly difficult to find and costly to replace.*

Features:

- Replaces select RCH20D, RHS25D, and RCM21D Renco models
- Line Driver output with ABS stepped voltage output
- Quadrature with index
- 5 VDC Input Voltage
- End mount 16-pin header connection
- Operating temperature up to 115°C

Contact Customer Service for pricing. Discounts available for volume orders.

Ordering Information

RENCO MODEL NUMBER	EPC DIRECT REPLACEMENT	CPR	POLE COUNT	BORE SIZE	MOUNT BC	INDEX GATING	MOTOR SERIES
RCH20D-2000/4-1/2-5/0-LD/VC-7-M6-S	DR21R-01	2000	8	0.500"	3.125"	A	F
RHS25D-P3-2000/4-1/2-5-CA6-LD-MS-CM-S	DR21R-01*	2000	8	0.500"	3.125"	A	F
RCH20D-5000/4-1/2-5/0-LD/VC-1-M6-S	DR21R-02	5000	8	0.500"	3.125"	A & B	F
RCH20D-2000/2-8MM-5/0-LD/VC-1-M6-S	DR21R-03	2000	4	8 mm	2.375"	A & B	H, HSM2
RCH20D-2000/3-8MM-5/0-LD/VC-1-M6-S	DR21R-04	2000	6	8 mm	2.375"	A & B	H, HSM3, HSM4
RCH20D-2000/4-1/2-5/0-LD/VC-1-M6-S	DR21R-05	2000	8	0.500"	2.375"	A & B	H, HSM6, HSM8
RCH20D-5000/3-8MM-5/0-LD/VC-1-M6-S	DR21R-06	5000	6	8 mm	2.375"	A & B	H
RCH20D-2000/3-1/2-5/0-LD/VC-7-M6-S	DR21R-07	2000	6	0.500"	2.375"	A	W
RHS25D-P3-2000/3-1/2-5-CA6-LD-MS-CM-S	DR21R-07*	2000	6	0.500"	2.375"	A	W
RCH20D-2000/2-12MM-5/0-LD/VC-1-M4-S *Includes hub shaft cover.*	DR21R-08	2000	4	12 mm	1.812"	A & B	N
RCH20D-5000/2-12MM-5/0-LD/VC-1-M4-S *Includes hub shaft cover.*	DR21R-09	5000	4	12 mm	1.812"	A & B	N
RCM21D4E-2000/4-1/2+-5/0-LD/VC-1-C-S	DR21R-10	2000	8	0.500"	2.400"	A & B	MPL
RCM21D4E-2000/4-1/2+-5/0-LD/VC-1-C-S	DR21R-11	2000	8	0.500"	2.375"	A & B	MPL

**Requires 6" Mating Cable, stock #080499-01*

Don't see the exact encoder you need?

*Call **(800) 366-5412** and our Technical Sales Department will cross-reference your encoder to the correct EPC model.*

1-800-366-5412 | encoder.com | sales@encoder.com
© 2025 Encoder Products Company, v1.2_20260109

D R 2 1 R - *Direct Replacement Encoder for select **Renco RCH20D, RHS25D,** and **RCM21D** models*

MODEL DR21R SPECIFICATIONS

Electrical

Input Voltage	5 VDC
Input Current	150 mA max with no output load
Output Format	Incremental – Two square waves in quadrature with channel A leading B for clockwise shaft rotation (as viewed from the mounting face), commutation and ABS stepped voltage. See Waveform Diagrams.
Output Types	TTL Line Driver – 20 mA max per channel (Meets RS 422 at 5 VDC supply)
Index	Once per revolution. See Waveform Diagrams.
Max. Frequency	300 kHz
Noise Immunity	Tested to BS EN61000-6-2; BS EN50081-2; BS EN61000-4-2; BS EN61000-4-3; BS EN61000-4-6, BS EN55011
Symmetry	180° (±18°) electrical
Quad. Phasing	90° (±22.5°) electrical
Min. Edge Sep.	67.5° electrical
Accuracy	Within 0.01° mechanical from one cycle to any other cycle, or 0.6 arc minutes.
Commutation	Up to 8 pole
Comm. Accuracy	1° mechanical

Mechanical

Max Shaft Speed	6000 RPM
Bore Size	0.500", 8 mm, or 12mm
Bore Tolerance	-0.0000" / +0.0006"
User Shaft Tolerances	
Radial Runout	0.007" max
Axial Endplay	±0.030" max
Starting Torque	0.50 oz-in
Moment of Inertia	3.9 X 10^{-4} oz-in-sec^2
Max Acceleration	1 X 10^5 rad/sec^2
Electrical Conn.	16-pin End Mount Header
Housing	All metal aluminum and zinc alloy
Mounting	1.182", 2.375" or 3.125" Flex-Mount
Weight	3.5 oz typical

Environmental

Operating Temp	0° to 115°C
Storage Temp.	-30° to 115° C
Humidity	5% – 90% RH non-condensing
Vibration	10 g @ 58 to 500 Hz
Shock	50 g @ 11 ms duration
Sealing	IP50

DR21R Waveform Diagram

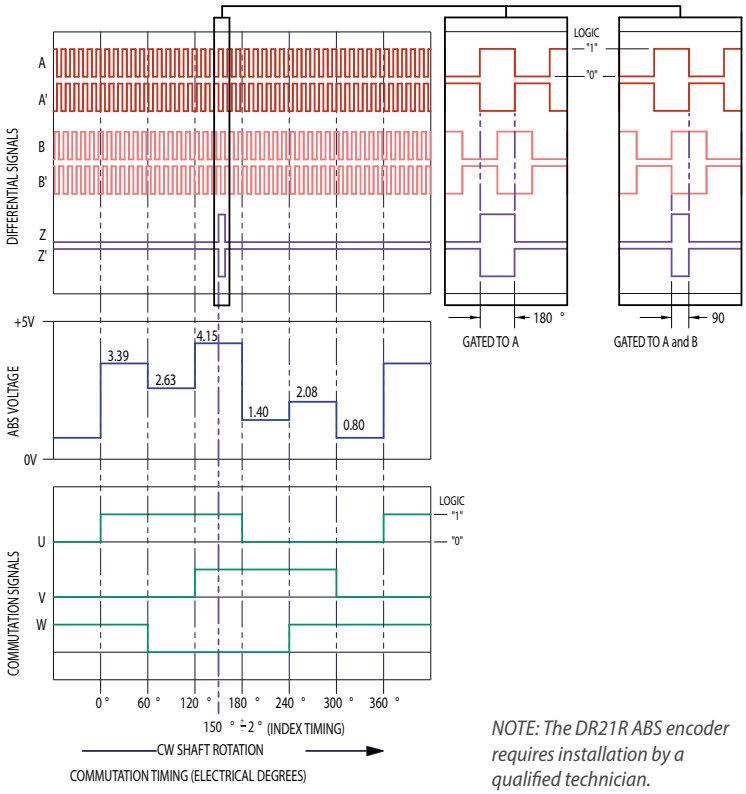

NOTE: The DR21R ABS encoder requires installation by a qualified technician.

DR21R Wiring Table

Pin	Function	Mating Cable Wire Color
1	+5 VDC	White
2	U	Violet
3	COM	Black
4	V	Gray
5	A	Brown
6	W	Red/Black
7	A'	Yellow
8	ABS	Yellow/Black
9	B	Red
10	---	N/C
11	B'	Green
12	---	N/C
13	Z (INDEX)	Orange
14	---	N/C
15	Z' (INDEX)	Blue
16*	CASE GROUND	N/C

** A 0.10 uF capacitor is connected from common (COM) to case ground internal to encoder.*

1-800-366-5412 | encoder.com | sales@encoder.com
© 2025 Encoder Products Company, v1.2_20260109

D R 2 1 R - *Direct Replacement Encoder for select* ***Renco RCH20D, RHS25D,*** *and* ***RCM21D*** *models*

DR21R-01 through DR21R-07 Dimensions

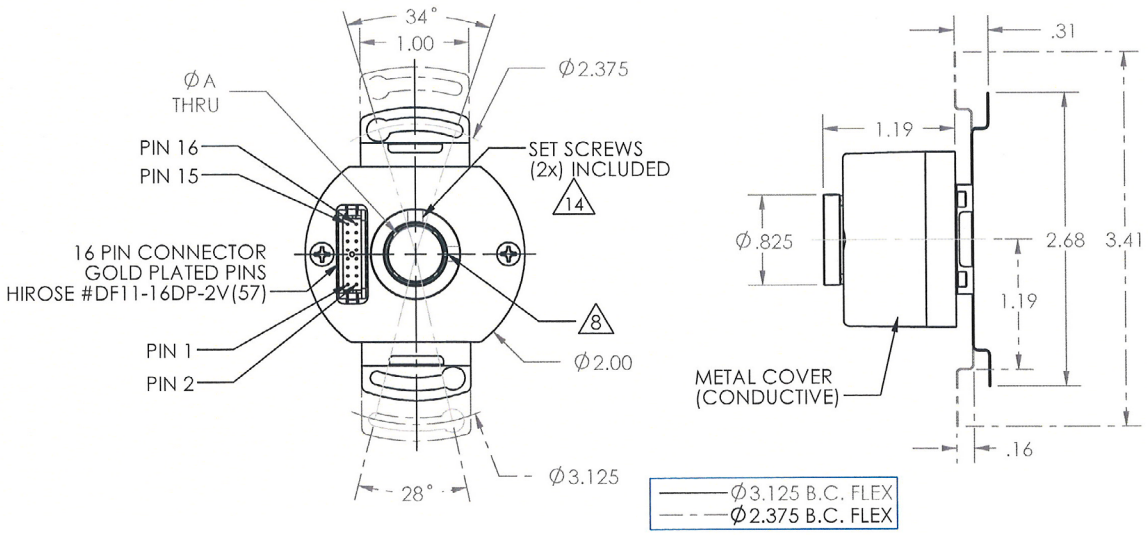

DR21R-08 & DR21R-09 Dimensions

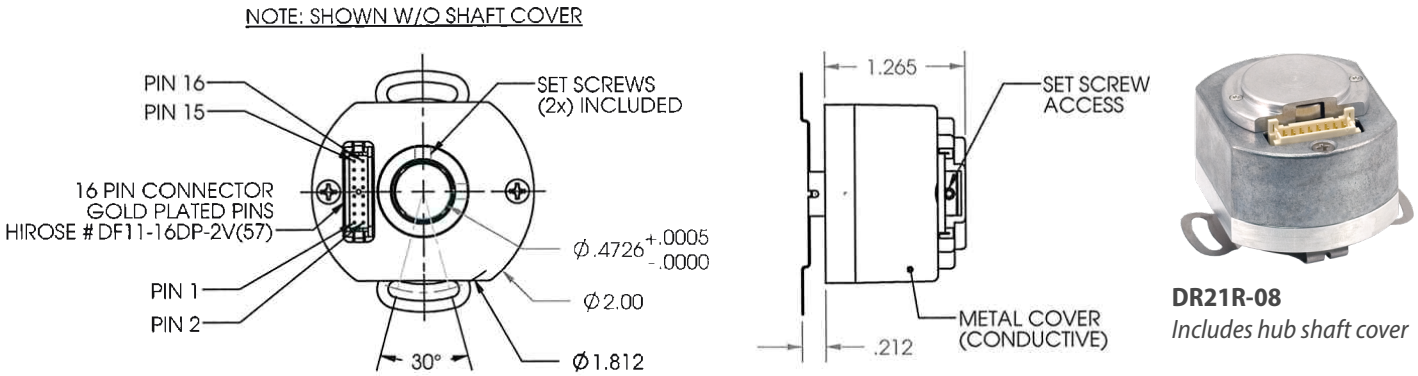

DR21R-08
Includes hub shaft cover

DR21R-10 & DR21R-11 Dimensions

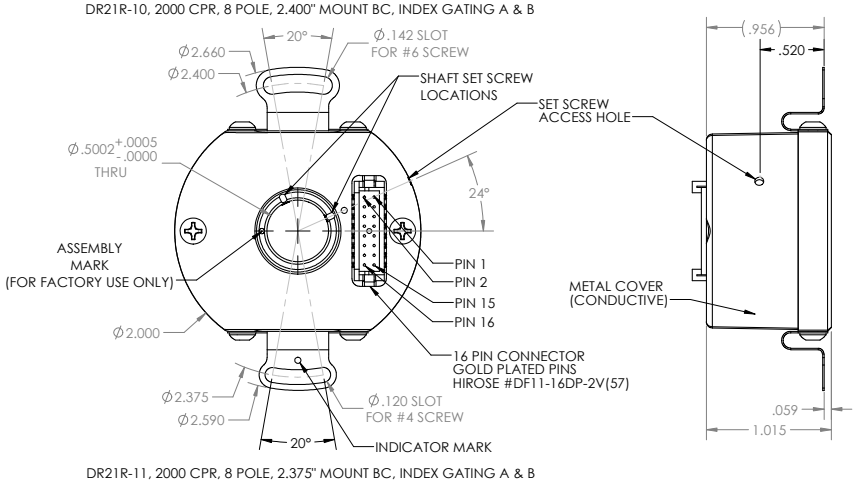

1-800-366-5412 | encoder.com | sales@encoder.com
© 2025 Encoder Products Company, v1.2_20260109