TRP TRU-TRACPRO™ - PROGRAMMABLE WHEELED ENCODER



FEATURES

The TRP Tru-TracPro is the programmable upgrade to the TR1 Tru-Trac®. It offers high resolution, user selectable waveforms, and many other features when used with the PR2 Programmer. The identical form factor to the TR1 allows for drop in interchangeability with existing systems.

- All-in-one field programmable encoder, measuring wheel & spring loaded torsion arm
- Resolutions from 1-100,000 CPR[1] - no need to change wheel size
- Customizable waveform output - choose from 40 options
- Teach index location
- Field calibration for better performance and accuracy
- Get up and running quickly with the optional PR2 programmer
- Spring loaded torsion arm makes wheel pressure adjustments easy
- Easily installed in a vertical, horizontal or upside down orientation
- Fast installation for mounting on any surface
- Reduce cost and inventory with a simplified system design - program as needed
- Gear option is available when used with an optional rack

COMMON APPLICATIONS

Web Tension Control, Paper Monitoring, Glue Dispensing, Linear Material Monitoring, Cut-to-Length, Conveyor Systems, Ink Jet Printing, Laser Printing, Labeling, Document Handling

TRP ORDERING GUIDE

Blue type indicates price adder options. Not all configuration combinations may be available. Contact Customer Service for details.

Model | **Mechanical** | **Electrical** | **Environmental**

TRP – U1 R4 – 000500 V1 A0 HV F00 – T0 S0 NC

CYCLES PER REVOLUTION
CPR may be specified from 1 - 100,000[1]

INPUT VOLTAGE
V1 5 to 28 VDC

CONNECTOR TYPE
F00 Cable by feet[6]
M00 Cable by meter[7]
J00 Cable with 5-pin M12 (feet)[6]
K00 Cable with 8-pin M12 (feet)[6]

OPERATING TEMPERATURE
T0 -20° to 85° C (Std)
T6 -40° to 100° C[4]

CERTIFICATION
NC None (Std)
CE CE Marked[8]

PIVOT SHAFT MOUNTING[2]
R4 Right side 1/4-20 thread
L4 Left side 1/4-20 thread
R6 Right side M6 thread
L6 Left side M6 thread

WHEEL TYPE & CIRCUMFERENCE
U1 Urethane 6.0"
U2 Urethane 200 mm
K1 Knurled 6.0"
K2 Knurled 200 mm
A1 Anodized Knurled 6.0"
A2 Anodized Knurled 200 mm
19 No wheel - 1/4" shaft
20 No wheel - 6 mm shaft
D1 40 tooth pinion gear for stainless steel rack
D2 40 tooth pinion gear for flexible rack

WAVEFORMS
Programmable feature
Select the initial index and waveform configuration to be programmed at factory. See options on page 4.

OUTPUT TYPE[9]
HV Line Driver[3]
PP Push-Pull
OC Open Collector
PU Pull-Up Resistor[4]

SEALING
S0 IP50 (Std)
S2 IP65
S3 IP66

NOTES:

1 There are a number of factors to consider when selecting the appropriate resolution for your application. Please see TB-547 for system considerations and recommendations.
2 See mechanical drawing for Right and Left Side definition. Pivot Shaft is reversible in the field.
3 Line Driver output not available with 5-pin M12 connector. Please consult Customer Service.
4 See Input Voltage specification for PU input voltage limitations at temperature.
5 For mating connectors, cables, and cordsets, see Accessories at encoder.com. For Connector Pin Configuration Diagrams, see Connector Pin Configuration Diagrams at encoder.com.
6 For cable lengths in feet enter 'F' plus cable length expressed in feet. Example: F06 = 6 feet of cable. Standard M12 cable length is limited to 16 feet. Contact customer service if a longer cable is needed.
7 For metric cable lengths enter 'M' plus cable length expressed in meters. Example: M06 = 6 meters of cable.
8 Please refer to Technical Bulletin TB-100: When to Choose the CE Mark at encoder.com.
9 Output Type is not programmable

1-800-366-5412 | encoder.com | sales@encoder.com
© 2026 Encoder Products Company, REV 1.2 -05/01/2026

TRP TRU-TRACPRO™ - PROGRAMMABLE WHEELED ENCODER

TRP SPECIFICATIONS

Electrical

Input Voltage	4.75 to 28 VDC (26 VDC max for PU) for temperatures up to 85° C 4.75 to 24 VDC (16 VDC max for PU) for temperatures between 85° C and 100° C
Input Current	100 mA max (65 mA typical) with no output load
Output Types[1]	**Line Driver (HV)** - 20 mA max per channel (Meets RS 422 at 5 VDC supply) **Open Collector (OC)** - 20 mA max per channel **Push-Pull (PP)** - 20 mA max per channel **Pull-Up (PU)** - Open Collector with 2.2K ohm internal resistor, 20 mA max per channel
Index	Once per Revolution, Programmable. - See Waveform Diagrams
Max. Frequency	1 MHz max, limited by shaft speed 200 kHz max for OC/PU, limited by shaft speed
EMC / CE	Immunity per EN 61000-6-2: 2019 Emissions per EN 61000-6-4: 2019
Quadrature Edge Separation	63° electrical or better is typical 52° electrical minimum
Waveform Symmetry	180°(±18°) electrical (A0 Waveform)

Mechanical

Max Shaft Speed	6000 RPM. Higher speeds may be achievable - contact Customer Service.
Shaft Material	Stainless Steel
Radial Shaft Load	5 lb max. Rated load of 2 to 3 lb for bearing life of 1.2 x 10^{10} revolutions
Axial Shaft Load	5 lb max. Rated load of 2 to 3 lb for bearing life of 1.2 x 10^{10} revolutions
Starting Torque	IP50 0.06 oz-in IP65 0.23 oz-in IP66 0.70 oz-in
Housing	Static dissipative nylon composite
Weight	5 oz typical

Environmental

Storage Temp	-25° C to 85° C
Operating Temp	-20° C to 85° C -40° C to 100° C optional
Humidity	98% RH non-condensing
Vibration	10 g @ 58 to 500 Hz
Shock	80 g @ 11 ms duration
Sealing	IP50 standard; IP65 or IP66 available

[1] Output type is not programmable and must be selected at time of order.

WIRING TABLE

For EPC-supplied mating cables, refer to wiring table provided with cable.

Trim back all unused wires.

Function	Gland Cable* Wire Color	5-pin M12**	8-pin M12**
Com	Black	3	7
+VDC	White	1	2
A	Brown	4	1
A'	Yellow	--	3
B	Red	2	4
B'	Green	--	5
Z	Orange	5	6
Z'	Blue	--	8
Shield	Bare***	--	--

*Standard cable is 24 AWG conductors with foil and braid shield.

**CE Option: Use cable cordset with shield connected to M12 connector coupling nut.

***CE Option: Cable shield (bare wire) is connected to internal case.

M12 PINOUT DRAWINGS

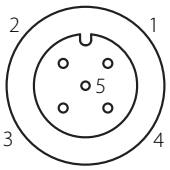

5-pin

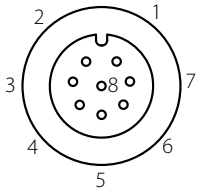

8-pin

© 2026 Encoder Products Company, REV 1.2 -05/01/2026

TRP TRU-TRACPRO™ - PROGRAMMABLE WHEELED ENCODER

TRP TRU-TRACPRO™ DRAWINGS

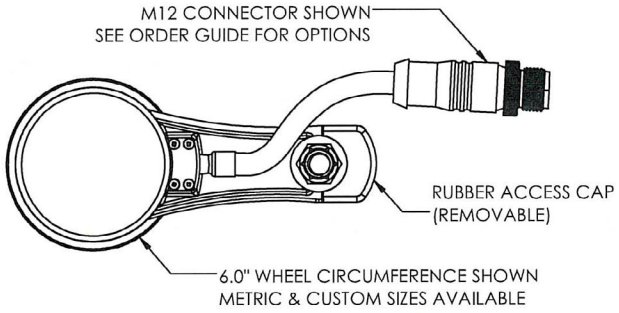

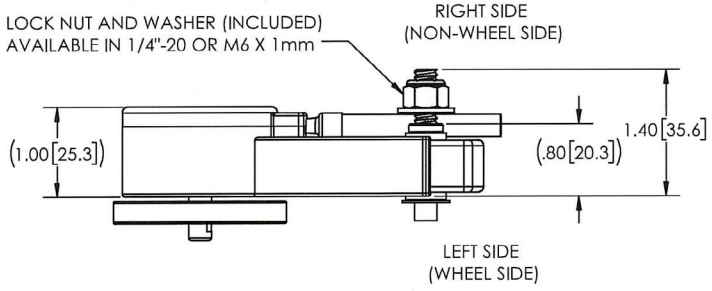

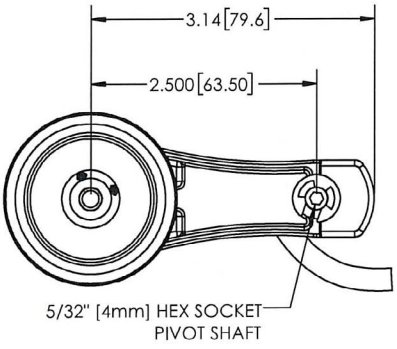

TRP TRU-TRACPRO™ EXPLODED VIEW

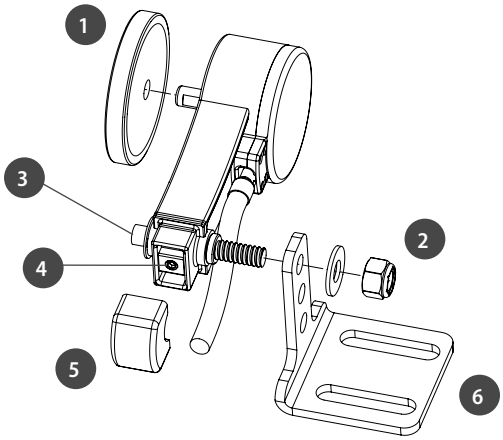

1 - MEASURING WHEEL
SEE ORDER GUIDE FOR OPTIONS

2 - LOCK NUT & WASHER (INCLUDED)
AVAILABLE IN 1/4"-20 & M6 X 1mm

3 - REMOVABLE & REVERSIBLE PIVOT SHAFT
AVAILABLE IN 1/4"-20 & M6 X 1mm
REPLACEMENT KITS AVAILABLE

4 - TORSION SPRING ADJUST
3/32" HEX SOCKET

5 - REMOVABLE RUBBER
ACCESS CAP (INCLUDED)

6 - MOUNTING BRACKET (OPTIONAL)
ORDER SEPARATELY

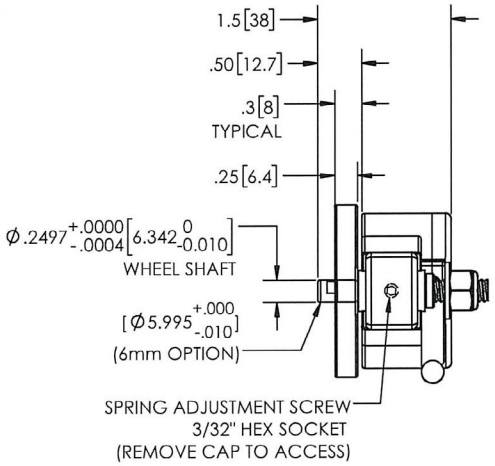

Note:
All dimensions are in inches with a tolerance of +0.005" or +0.01" unless otherwise specified.
Metric dimensions are given in brackets [mm].

1-800-366-5412 | encoder.com | sales@encoder.com
© 2026 Encoder Products Company, REV 1.2 -05/01/2026

TRP TRU-TRACPRO™ - PROGRAMMABLE WHEELED ENCODER

WAVEFORM OPTIONS

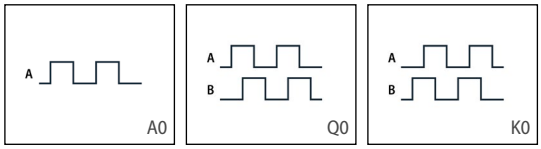

Programmability Note:

- If A0 option selected only CPR is programmable
- If Q0 or K0 option selected only CPR and quadrature direction are programmable
- If A1 thru Y4 option is selected CPR and any waveform is programmable

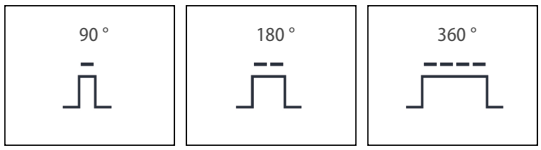

STANDARD EPC WAVEFORM (B5)

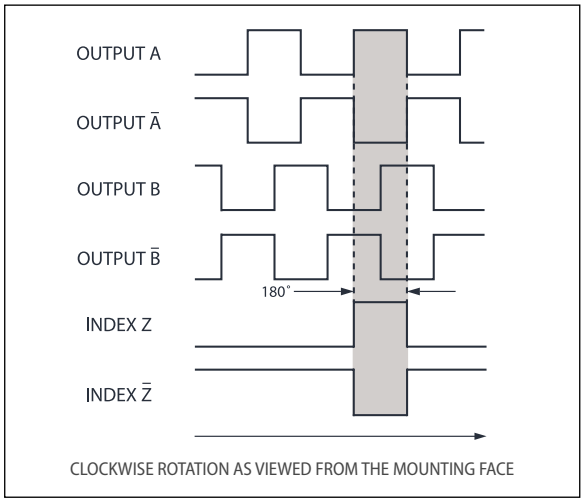

NOTE:

ALL DEGREE REFERENCES ARE ELECTRICAL DEGREES.

Waveform shown with optional complementary signals Ā, B̄, Z̄ for HV output only.

A

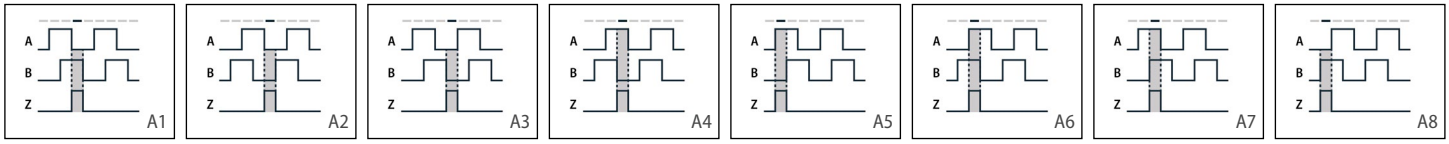

B

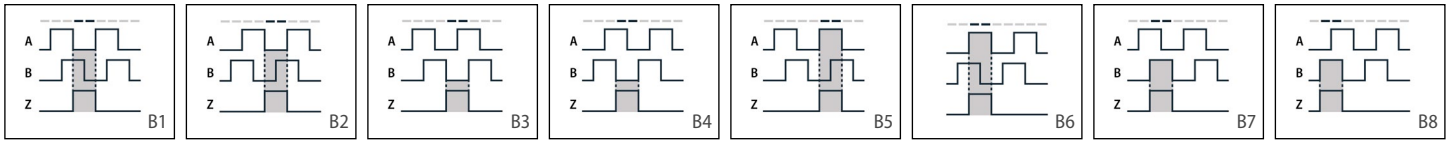

C

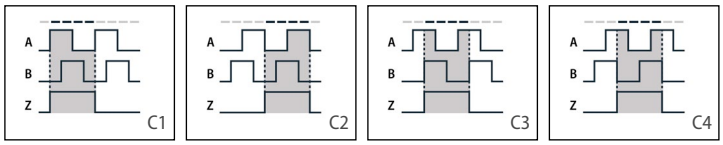

W

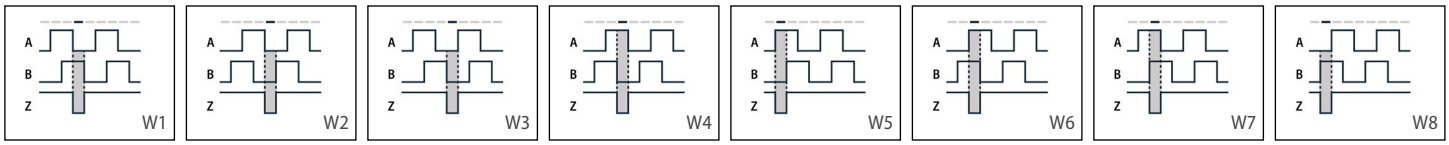

X

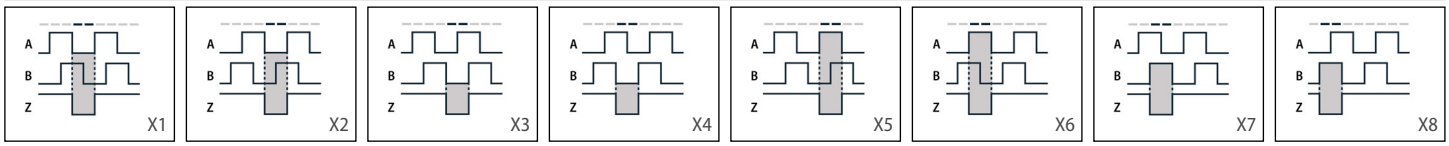

Y

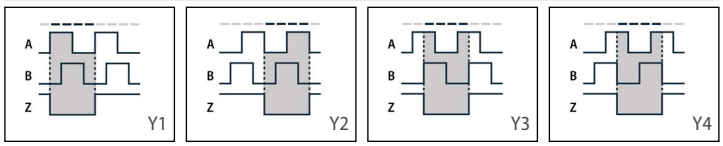

© 2026 Encoder Products Company, REV 1.2 -05/01/2026

TRP TRU-TRACPRO™ - PROGRAMMABLE WHEELED ENCODER OPTIONS

MOUNTING BRACKET

Allows for a variety of mounting positions and makes installation of the TRP even easier.



Aluminum Bracket

Stock #140104

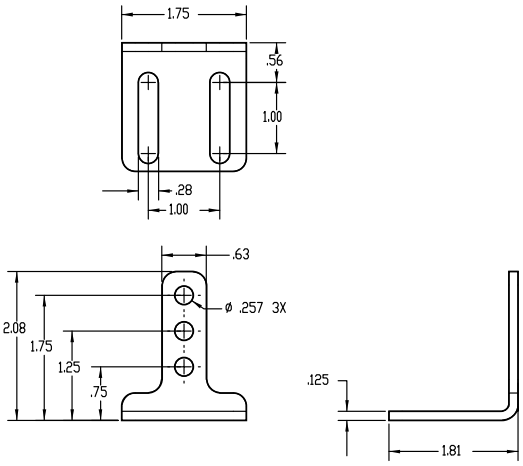

PR2 PROGRAMMER*



PR2 ORDER GUIDE

Part #**	Encoder Connector
PR2-001-J	5-pin M12
PR2-001-K	8-pin M12
PR2-001-T	Flying Lead

*Sold separately

**Includes PR2 Programmer and 2 meter USB Type-A to USB Type-C cable. Free software download from EPC website.

FEATURES

- Program the CPR to any resolution between 1-100,000
- Customizeable output waveform - Choose from 40 options
- Teach index location
- Easily restore factory configuration
- Check temperature and diagnostic data
- Field calibration for better performance and accuracy
- View device information

M12 CABLE CORDSET OPTIONS

Connector Type	M12 Connector Coding	Cable Length	CE Compatible[1]	Part #
8-conductor	A	1.64 ft (0.5 m)	No	075100
	A	6.56 ft (2 m)	No	075101
	A	13.12 ft (4 m)	No	075102
	A	19.69 ft (6 m)	No	075103
	A	32.81 ft (10 m)	No	075104
8-conductor	A	6.56 ft (2 m)	Yes	075200
	A	13.12 ft (4 m)	Yes	075201
	A	19.69 ft (6 m)	Yes	075202
	A	32.81 ft (10 m)	Yes	075203
5-conductor	A	3.28 ft (1 m)	No	075204
5-conductor	A	3.28 ft (1 m)	Yes	075211

[1] Shield Connected to Coupling Nut



Part #075100
(for connecting TRP to controller)

Tru-Trac® and Tru-TracPro™ are trademarks of Encoder Products Company

1-800-366-5412 | encoder.com | sales@encoder.com

© 2026 Encoder Products Company, REV 1.2 -05/01/2026