TECHNICAL BULLETIN

TB-544: LCX Draw Wire Installation Guide

Important Warning Notices

- Do not try to open the device. The stored energy of the spring drive may lead to injuries when being mishandled.
- Do not touch the wire when operating the draw wire unit.
- When mounting outdoors, protect the sensor and the wire from icing up at temperatures below 0° C. The usage of a deflection pulley may help remove ice from the wire.
- When operating the sensor in a humid environment, install the sensor with the wire exit downwards. Otherwise water will gather inside the housing, which leads to corrosion. Where applicable, use the bottom wire exit option.

READ FIRST! - Proper Handling of the Wire

Unpacking Your Draw Wire Unit

Carefully lift the device out of the box by the housing. Do not pull the wire. After unpacking the device, check it for any visible damage as a result of rough handling during shipment. Check the package to insure that all parts have been included. If necessary, contact EPC directly for further assistance.

The wire must be extracted from the draw wire unit in line with the exit axis.

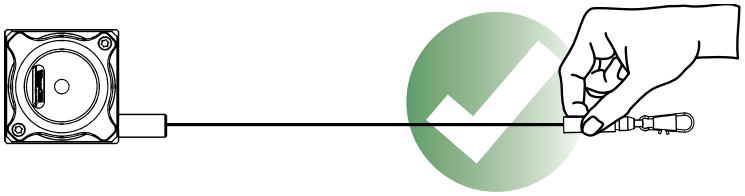

Do not pull on the wire directly. This will buckle the wire. Do not operate the draw wire unit if the wire is buckled or damaged. A damaged or cut wire may lead to injuries or damage to the draw wire unit and encoder.

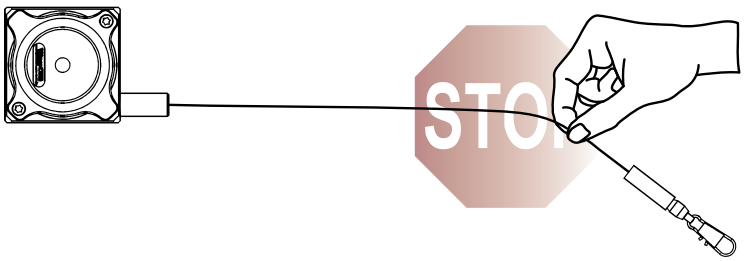

When installing or operating the draw wire unit, take care not to let the wire snap back accidentally or extract the wire more than the specified measurement range, as this might destroy the draw wire unit and void the warranty.

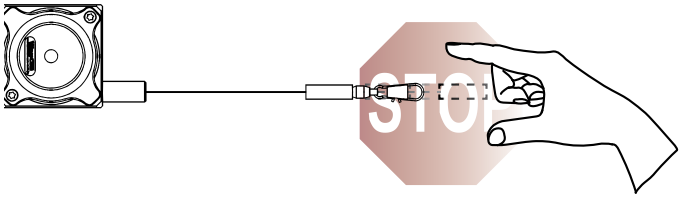

Use a deflection pulley if required.

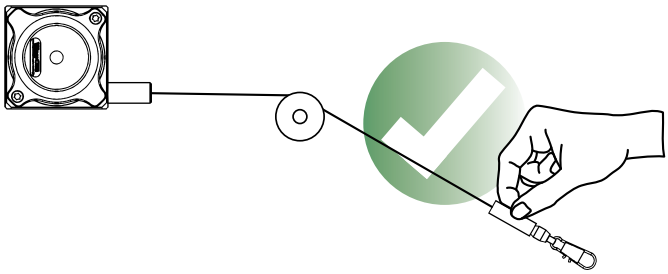

Avoid guiding the wire over edges or corners.

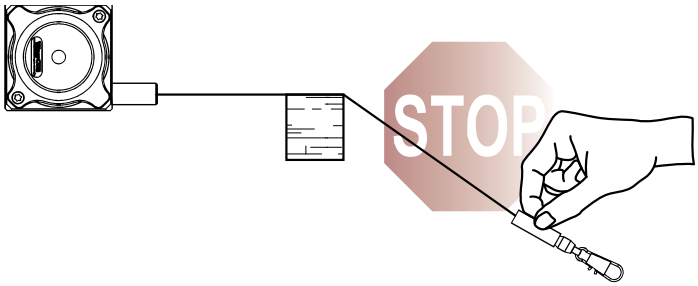

The maximum deviation off the exit axis is 3°. Avoid extracting the wire at an angle off the exit axis, since the service life of the draw wire unit will be greatly reduced. If it is not possible to keep the wire within the specified limit of 3°, a deflection pulley must be used.

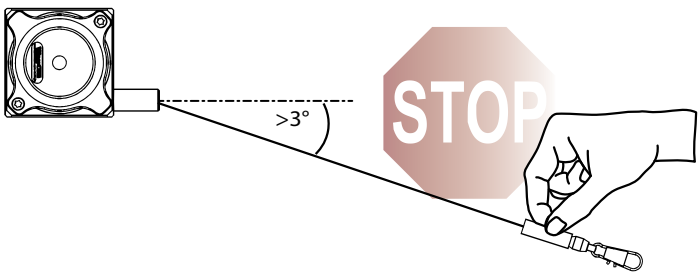

Handling the Wire

- Route the wire preferably in corners or guarded in channels to prevent contamination or accidental touch.
- Avoid routing the wire over edges or corners. Use a deflection pulley instead.
- When installing or operating the draw wire unit, take care not to let the wire snap back accidentally or extract the wire more than the specified measurement range, as this might damage or destroy the draw wire unit and void the warranty.
- The wire must be extracted from the draw wire unit in line with the exit axis. The maximum deviation off the exit axis is 3°. Avoid extracting the wire at an angle, since the service life of the draw wire unit will shorten considerably. If it is not possible to keep within the limit of 3°, a deflection pulley **must** be used.
- Do not operate the sensor if the wire is buckled or damaged. A cut or loose wire may lead to injuries or a damage to the draw wire unit or encoder.

Mounting of the Draw Wire Unit

- Please start by mounting the encoder to the LCX draw wire unit. A description is given on the following pages.
- Next mount the draw wire unit at the desired location by using the mounting holes. Do not extract the wire or attach the wire to the measuring target until the draw wire assembly is securely mounted.
- Depending on the draw wire model it can be installed either by using the holes in the mounting plate or by using the supplied T-slot nuts/clamp brackets. You will find a detailed description of both installation methods in this installation guide.
- Open the wire clip after the draw wire unit is fully mounted and carefully extract the measuring wire. Hook the wire clip on the measuring target and close the bracket of the clip. For safety, use a screw driver through the clip to extract the wire. Do not pull the wire with your fingers.

Maintenance

The devices are maintenance-free. If, however, the wire becomes dirty due to adverse environmental conditions, it can be cleaned with a cloth soaked in resin-free machine oil.

Mounting an Encoder

Mounting an Encoder to the LCX80, LCX120, and LCX135 (up to 8 m) draw wire units

The LCX Series draw wire units allow a fast and easy mounting of the encoder by the customer. A detailed description of the mounting procedure is shown in the following pictures.

IMPORTANT: Encoders suitable for use with the LCX units must have: clamping flange with 36 mm diameter; a shaft diameter of 10 mm; and a shaft length between 10 and 20 mm.

NOTE: All non-metric measurements in this document are for reference only.

Mounting by Clamping Flange

Step 1

Start by inserting the encoder into the clamping flange.

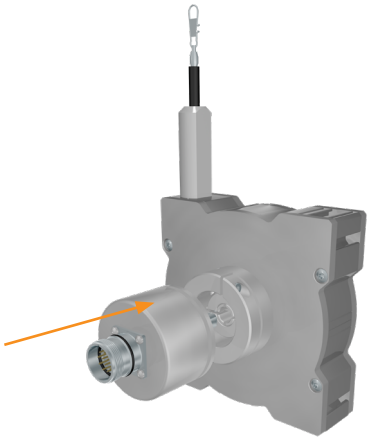

Step 2

The encoder is now connected to the clamping flange.

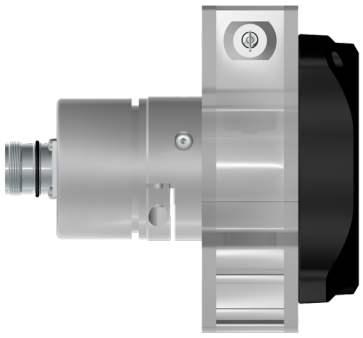

Step 3

By tightening the inner radial screw (approx. 2 Nm / 283 oz-in) with a 2.5 mm hex driver the encoder shaft will be clamped to the draw wire unit and is secured from slipping.



Step 4

By tightening the outer radial screw (approx. 2 Nm / 283 oz-in) with a 2.5 mm hex driver the encoder housing will be clamped to the draw wire housing and is secured from twisting. The complete assembly is now ready to be mounted at the desired location.

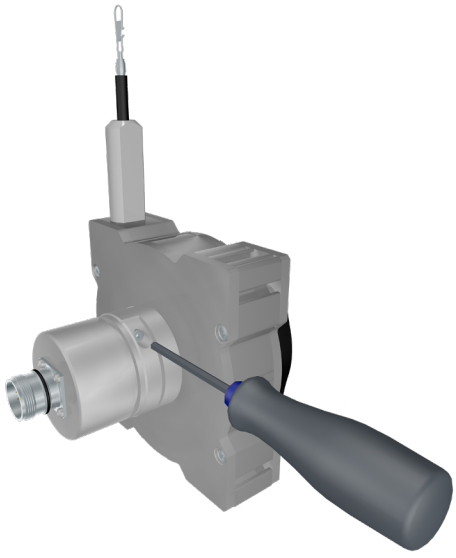

Mounting an Encoder to LCX135 (10 m and above)

The LCX135 with measurement ranges 10 m or greater is available for an encoder to be mounted by the customer. You will find a detailed 3 step description of this EASY-Clamp-Mechanism in the next section.

IMPORTANT: All incremental and absolute encoders are suitable that have a clamping flange with 36 mm diameter; a shaft diameter of 10 mm; and a shaft length between 10 and 20 mm.

Easy-Clamp-Mechanism

Step 1

Start by sliding the included coupling (1) onto the shaft of the encoder and tighten the set screw (1 Nm / 141 oz-in) with a 2 mm hex driver. Please pay attention that the dimension between contact surface of the encoder and the end of the cylinder bolt is 35 mm.

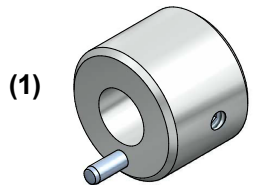

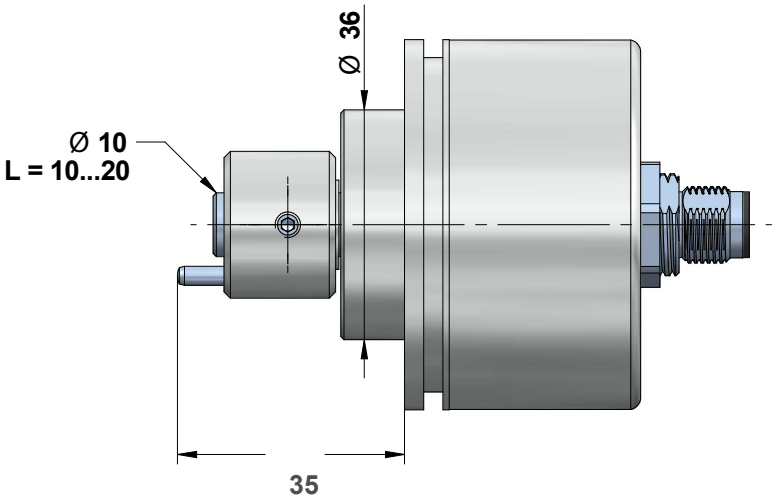

Step 2

To mount the encoder into the easy-clamp-flange, slip the cylinder bolt (1) of the coupling into the spring (2).

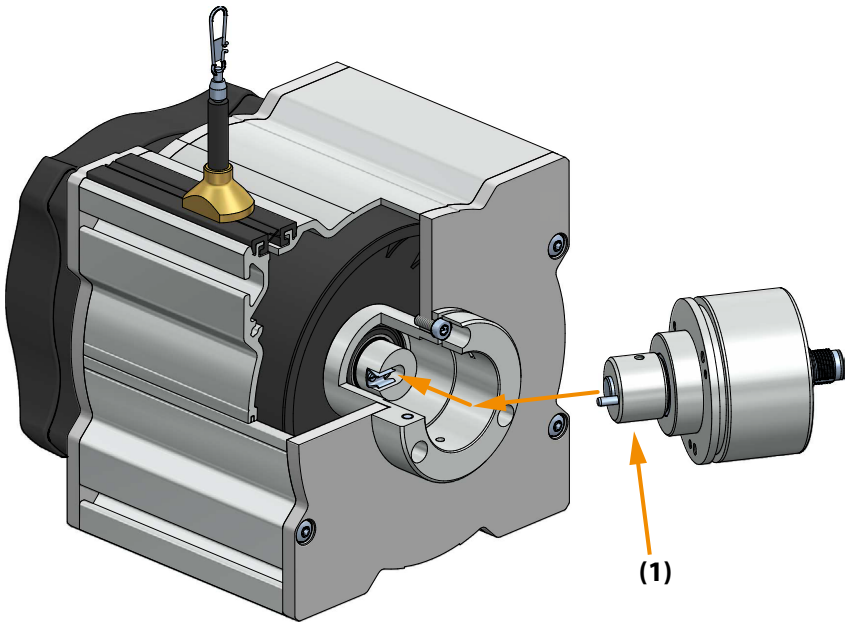

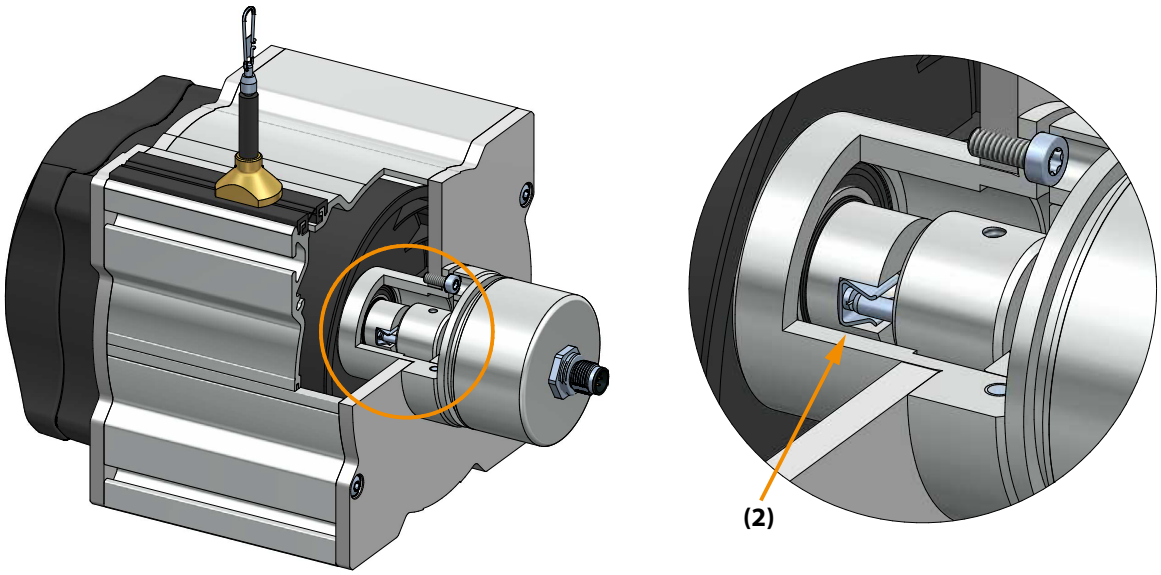

Step 3

Use a 3 mm hex driver to tighten the radial screw (1.5 Nm / 212 oz-in). The encoder will be clamped and secured from twisting. The draw wire assembly is now ready to be mounted at the desired location.

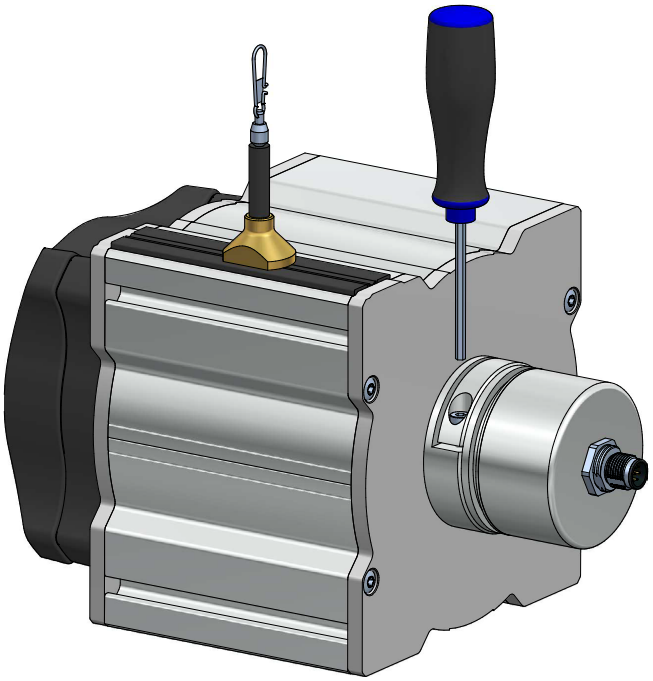

Mounting the LCX80 and the LCX120

Mounting for standard wire exit, sideways top wire exit (option 1)

The draw wire assembly is usually installed by using the regular mounting plate. By disassembling the mounting plate, there are 2 x M4 threads in the draw wire housing for alternative installation.

LCX80

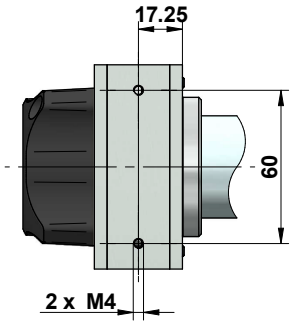

LCX120

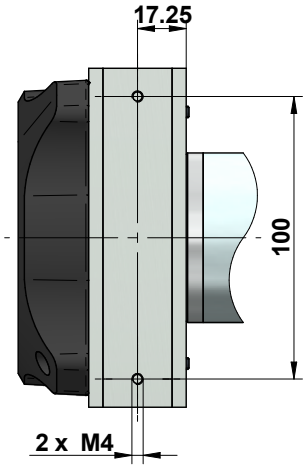

Mounting for sideways bottom wire exit (option 2), bottom wire exit (option 3)

Draw wire units with option 2 or option 3 wire exits have a modified base plate.

LCX80

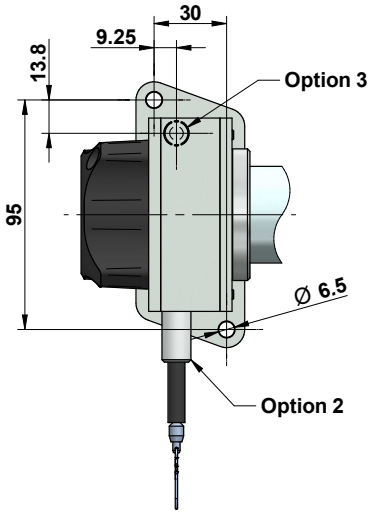

LCX120

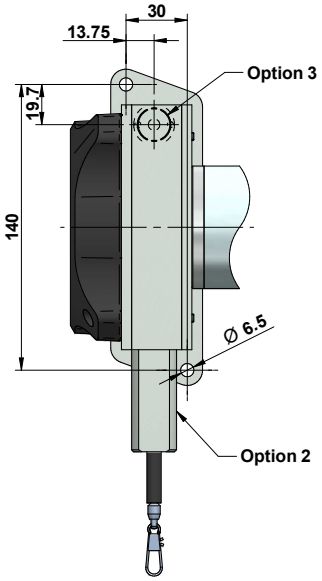

Mounting the LCX135

Step 1 Mounting via T-slot nuts

The included T-slot nuts can be easily inserted into the grooves of the sensor housing. The nuts have a M6 thread. Two (up to 20 m measurement range) or four (more than 25 m measurement range) T-slot nuts are included in the package.



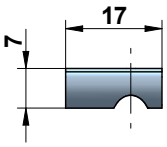

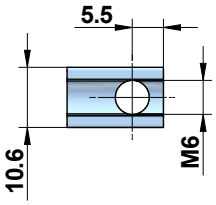

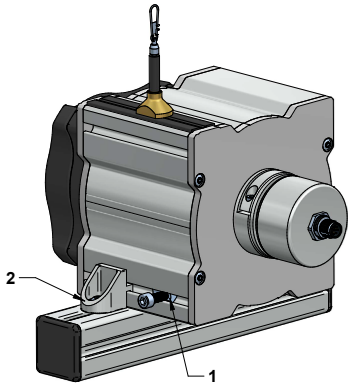

Step 2 Mounting via angle clamp brackets

The angle clamp brackets feature a bore for M6 screws to fix it on a plate, slab or a profile. Two (up to 20 m measurement range) or four (more than 25 m measurement range) angle clamp brackets are included in the delivery.

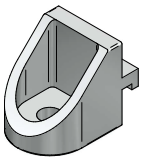

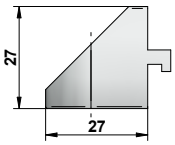

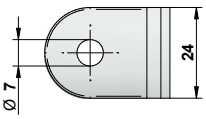

Position of the grooves and angle clamp brackets

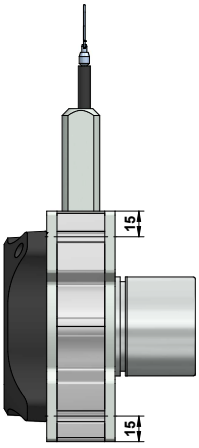

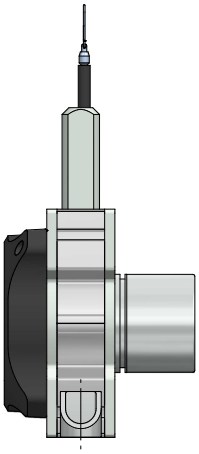

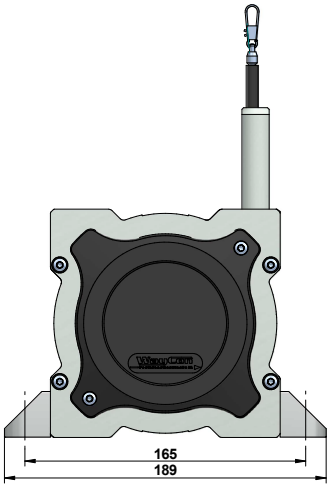

The required number of angle clamp brackets and slot nuts/screws ship with each unit. If additional brackets are required, or replacement parts are needed, please contact EPC Customer Service and order Part Number: 097262.