PART NUMBER	FINISH	Ø A	B
161400	NONE	2.51	200 mm
161401	NONE	1.91	6"
161423	RED HARD ANODIZE	1.91	6"
161424	RED HARD ANODIZE	2.51	200 mm

REVISIONS			
REV	DESCRIPTION	ECO#	DATE
A	INITIAL RELEASE	08966	5/27/25

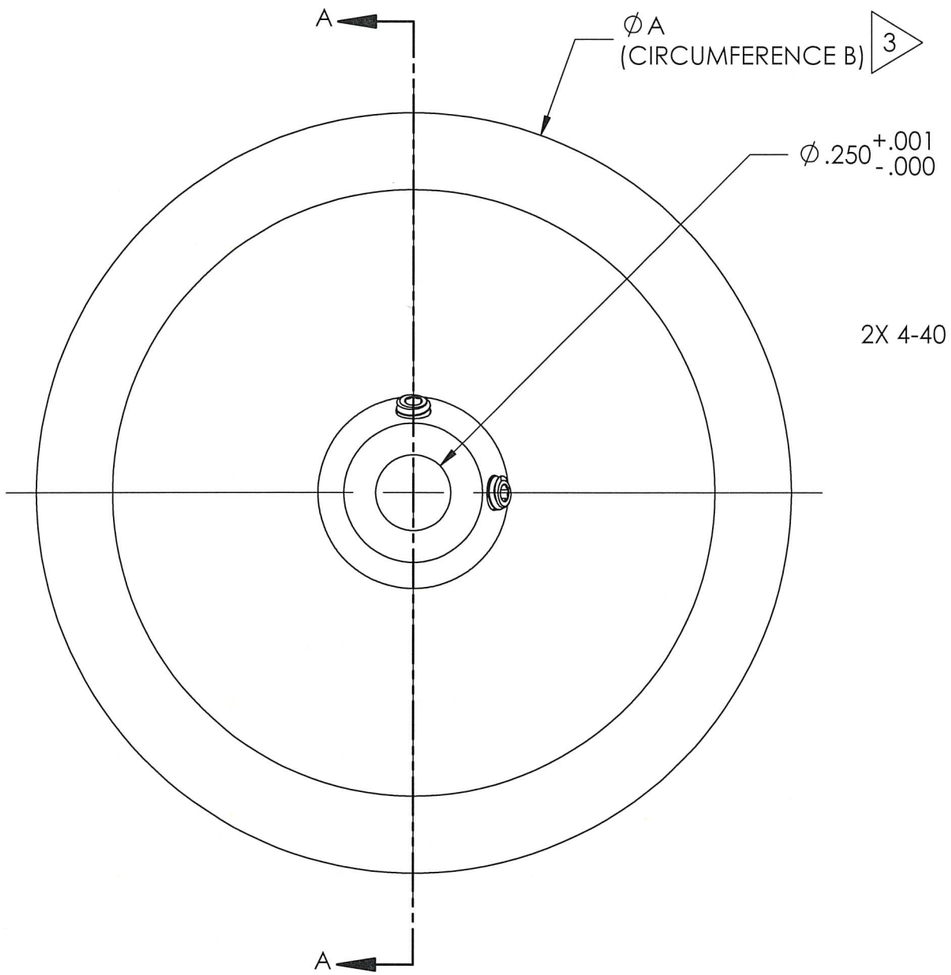

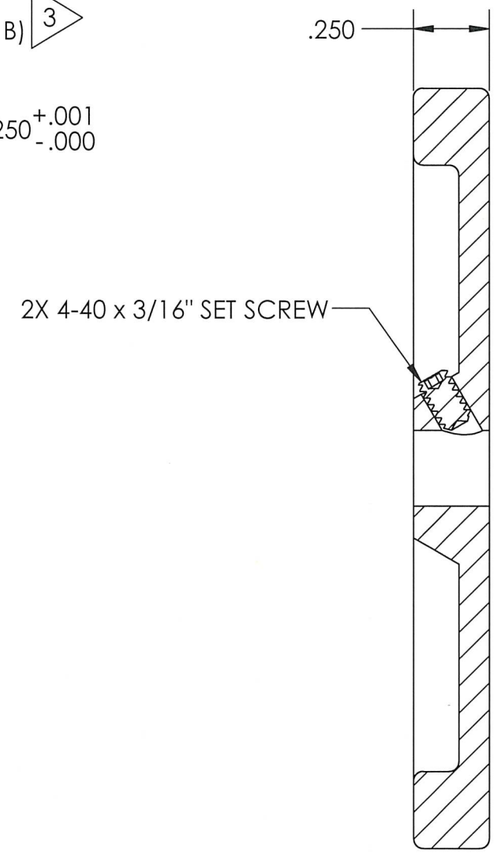

SECTION A-A

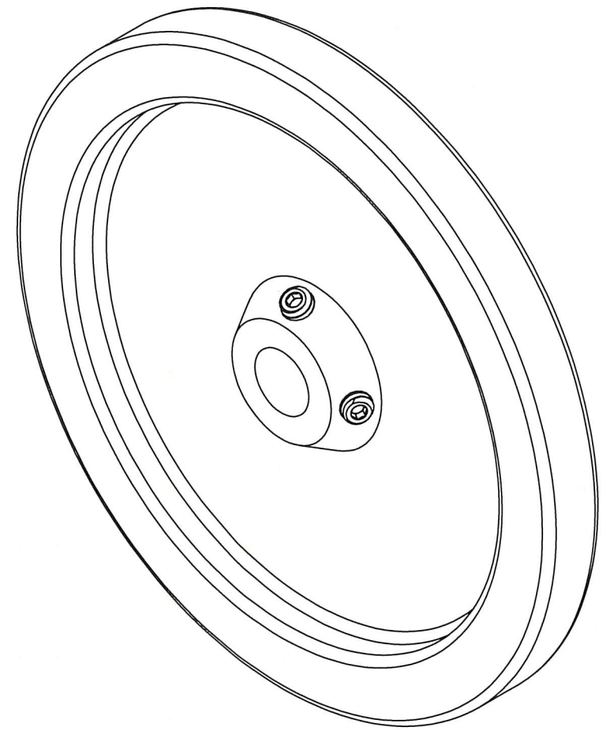

NOTES: UNLESS OTHERWISE SPECIFIED

1. MATERIAL: ALUMINUM
2. FINISH: SEE TABLE
3. KNURL DIAMETER INDICATED. CIRCUMFERENCE LISTED FOR REFERENCE ONLY.

THIRD ANGLE PROJECTION		ENCODER PRODUCTS COMPANY		www.encoder.com	
		APPROVALS	DATE	NAME AND TITLE	
DIMENSIONS ARE IN INCHES		DRAWN MAF	5/14/25	KNURLED WHEEL, 1/4" WIDTH	
ISSUE DATE: 5/27/25	TOLERANCES	CHECKED LC/TH	5/23/25		
NEXT ASSEM.	DECIMAL .XXX±.005	RESP ENG MAF	5/23/25	DWG. NO. WHL-KNURLED-02	REV. A
PREV. ASSEM.	DECIMAL .XX±.01	MFG ENG MW	5/23/25		
PART NUMBER SEE TABLE	ANGULAR .X±1°	QUAL ENG SC	5/23/25	SCALE: NONE DWG. SIZE: B	SHEET 1 OF 1